Name Plate for Manifold Regulator

SMC CORPORATION
4-14-1 Soto-kanda, Chiyoda-ku
Tokyo 101-0021, JAPAN
URL: http://www.smcworld.com

Feature:

Transparent acrylic plate to be mounted on the handle part of Manifold regulator / ARM Series

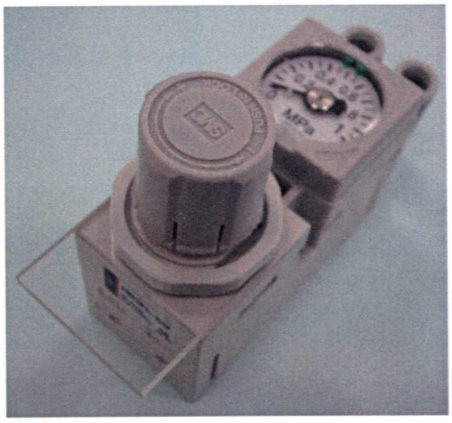

<Application example>
The plate indicates the pressure set by this regulator.

How to Order:

136163-2 (To be ordered as single unit)

Dimensions (mm)

<Unit dimensions>

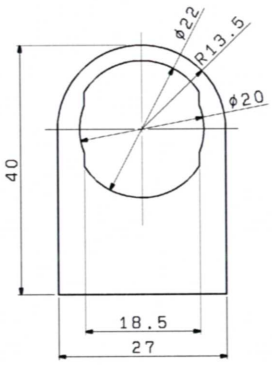

<Dimensions when installed on the regulator>

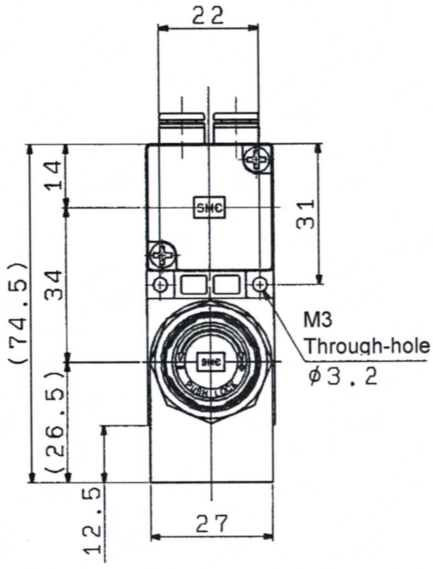

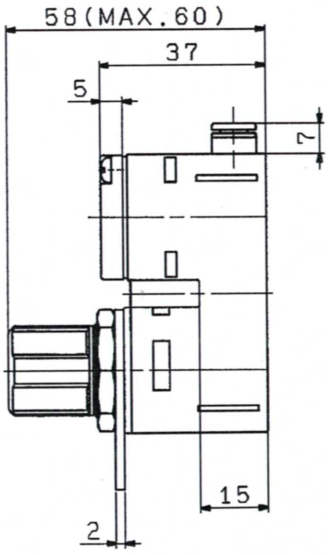

⚠ **Caution** : To ensure the safest possible operation of this product,please be sure to read thoroughly the "Safety instructions" in our "Best Pneumatics" general catalog before use.

©2007SMC CORPORATION All Rights Reserved