Type 01C Circular Connector

VFR2000/3000/4000/5000 Series

- When multi-connector is used, mass-termination between power supply side and solenoid valve can be done. This saves the wiring connection labor.
- Wire connection specifications
  Lead wire for both solenoid A and B sides in manifold are connected to connector terminal as COM specifications.

Fig. (1) U side

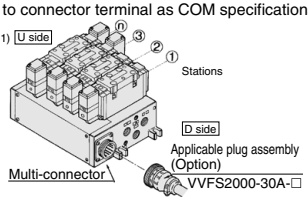

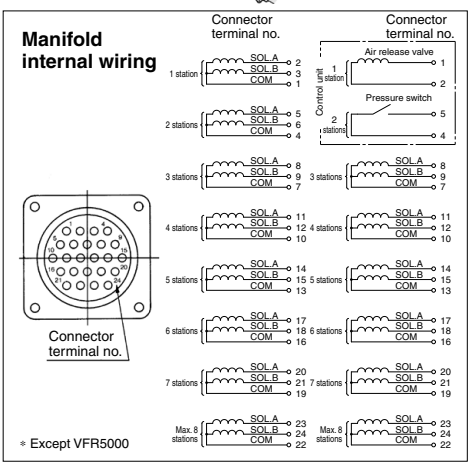

Note 1) Maximum number is 8 stations. Note 2) It is used as +COM and –COM.
Note 3) Station numbers are started from D side although connector is mounted on D or U Side.

Applicable Plug Assembly (Option)

Assembly part no.	Cable length	Component parts
VVFS2000-30A-1	1.5 m	Plug 206837-1 1 pc. Cable clamp 206138-1 1 pc. Socket 66101-2 24 pcs. Cable VCTF 24 cores x 0.75 mm² made by Tyco Electronics AMP K.K.
VVFS2000-30A-2	3 m	
VVFS2000-30A-3	5 m	
VVFS2000-30A-4 ∗	7 m	
VVFS2000-30A-5 ∗	10 m	
VVFS2000-30A-6 ∗	15 m	
VVFS2000-30A-7 ∗	20 m	

∗ Option

Cable Color List of Each Terminal No.

Terminal no.	1	2	3	4	5	6	7	8	9	10	11	12	13
Lead wire color	Orange	Orange	Black	Black	Green	Green	Red	Red	Blue	Blue	Yellow	Yellow	Brown
Dot marking	—	Yes	—	Yes	—	Yes	—	Yes	—	Yes	—	Yes	—

Terminal no.	14	15	16	17	18	19	20	21	22	23	24
Lead wire color	Brown	White	White	Pink	Pink	Gray	Gray	Sky blue	Sky blue	Light green	Light green
Dot marking	Yes	—	Yes	—	Yes	—	Yes	—	Yes	—	Yes