# Pulse Valve Valve for Dust Collector

Air

New Solenoid Valve Type | Air Operated Type

CE UKCA RoHS

Excludes the air operated type
(For details, refer to pages 5 and 30.)

ATEX Compliant *55-JSXFA Series* p. 29

## Life: 10 million cycles*1 or more/ 10 times*2 or more

## High peak pressure and low air consumption

| | |
|---|---|
| Peak pressure | 15%*3 increase |
| Air consumption | 35%*3 reduction |

*1 Based on SMC's specific testing conditions (JSXF□□□-06)
*2 Compared with the existing SMC model

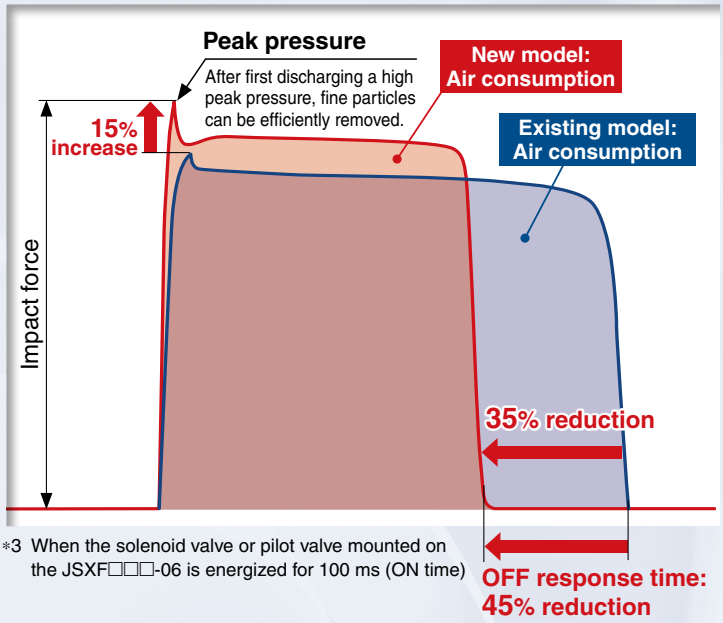


*3 When the solenoid valve or pilot valve mounted on the JSXF□□□-06 is energized for 100 ms (ON time)

## Fluid temperature: –40 to 60°C

Can be used in a wide range of temperatures

### Variations

| Type | Piping | | Port size | Orifice diameter [mm] | Thread type |
|---|---|---|---|---|---|
| New Solenoid valve p. 5 | Compression fitting type  JSXFE Series | Direct piping type  JSXFF Series | 3/4 (20A) | ø32 | Rc NPT G |
| | | | 1 (25A) | ø40 | |
| | | | 1 1/2 (40A) | ø50 | |
| | Immersion type  JSXFH Series | | 3/4 (20A) | ø32 | |
| | | | 1 (25A) | ø40 | |
| | | | 1 1/2 (40A) | ø45 | |
| | | | 2 (50A) | ø55 | |
| Air operated p. 15 | Compression fitting type  JSXFAE Series | Direct piping type  JSXFAF Series | 3/4 (20A) | ø32 | |
| | | | 1 (25A) | ø40 | |
| | | | 1 1/2 (40A) | ø50 | |
| | Immersion type  JSXFAH Series | | 3/4 (20A) | ø32 | |
| | | | 1 (25A) | ø40 | |
| | | | 1 1/2 (40A) | ø45 | |
| | | | 2 (50A) | ø55 | |

# *JSXF/JSXFA Series*

SMC

## Long service life: 10 million cycles*1 or more

**A spring is not necessary due to the high-strength elastomer diaphragm.**

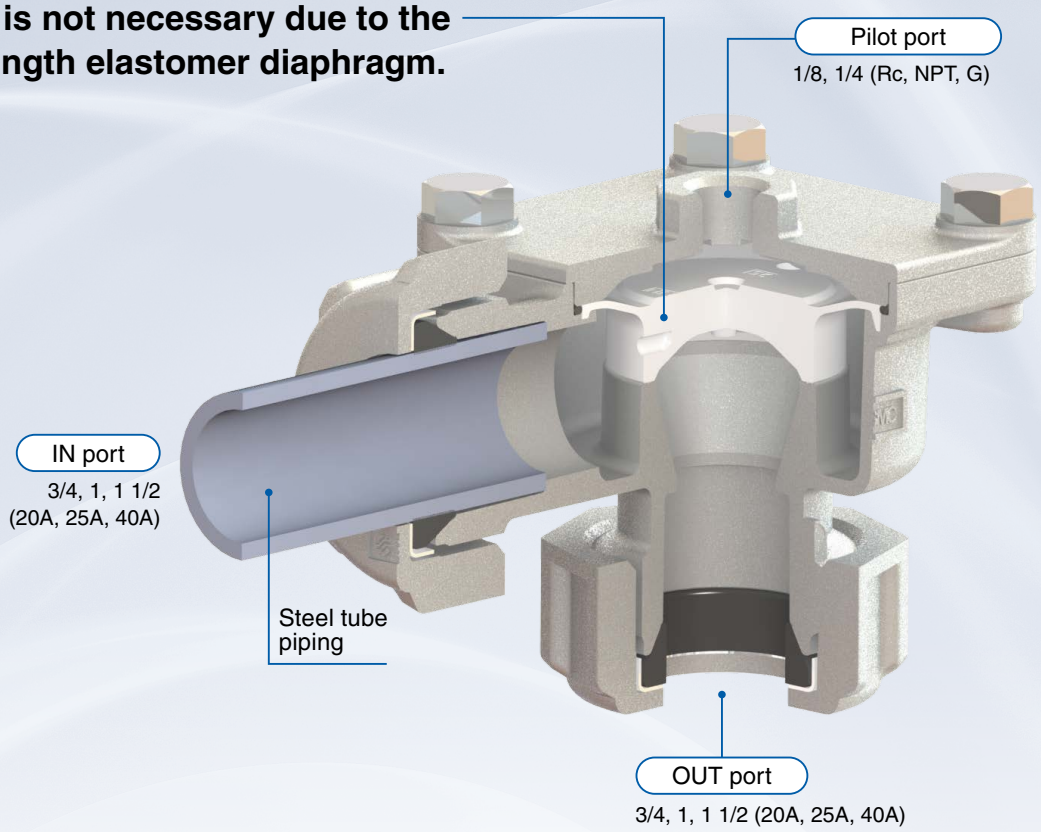


## OFF response time: 45%*1, *2 reduction

## No need to weld the tank piping

## Easier maintenance

**The springless diaphragm allows for easy maintenance of the valve. A main valve and sub-valve (for 40A) are included in the maintenance kit.**

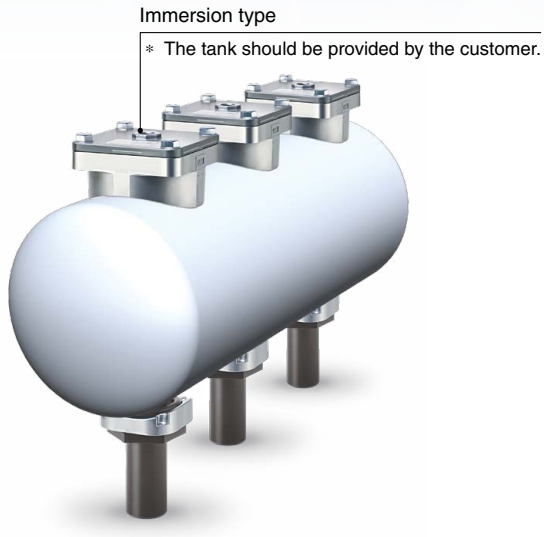


## Flow rate characteristics: 40%*1, *2 increase

**Optimal design for the internal geometry**

*1 Based on SMC's specific testing conditions (JSXFA-06, Pilot valve orifice of ø5 mm or larger, Excludes made-to-order option "A")
*2 Compared with the existing SMC model

## Pulse valve application examples

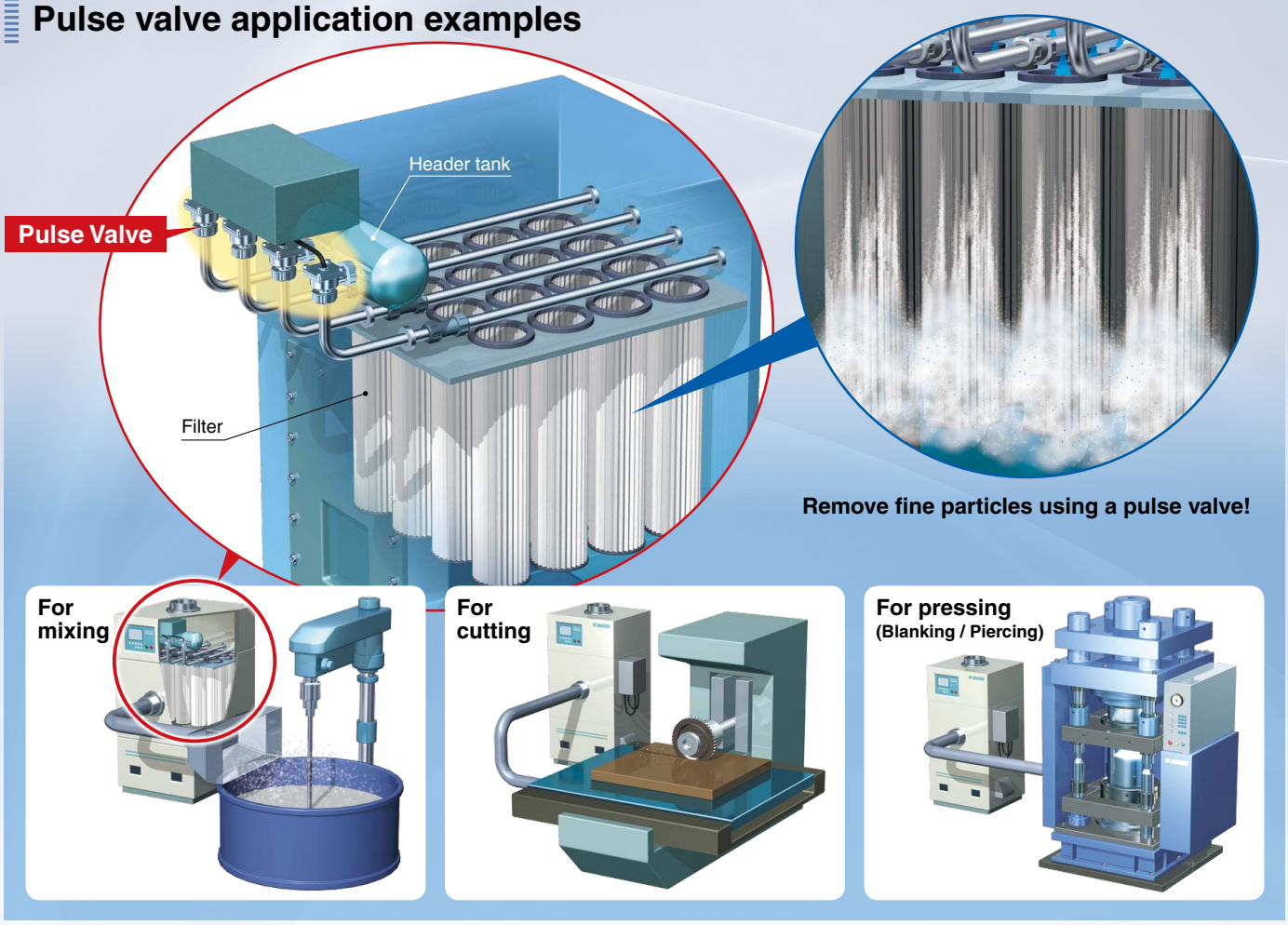


## Pulse blow can be used in various industries!

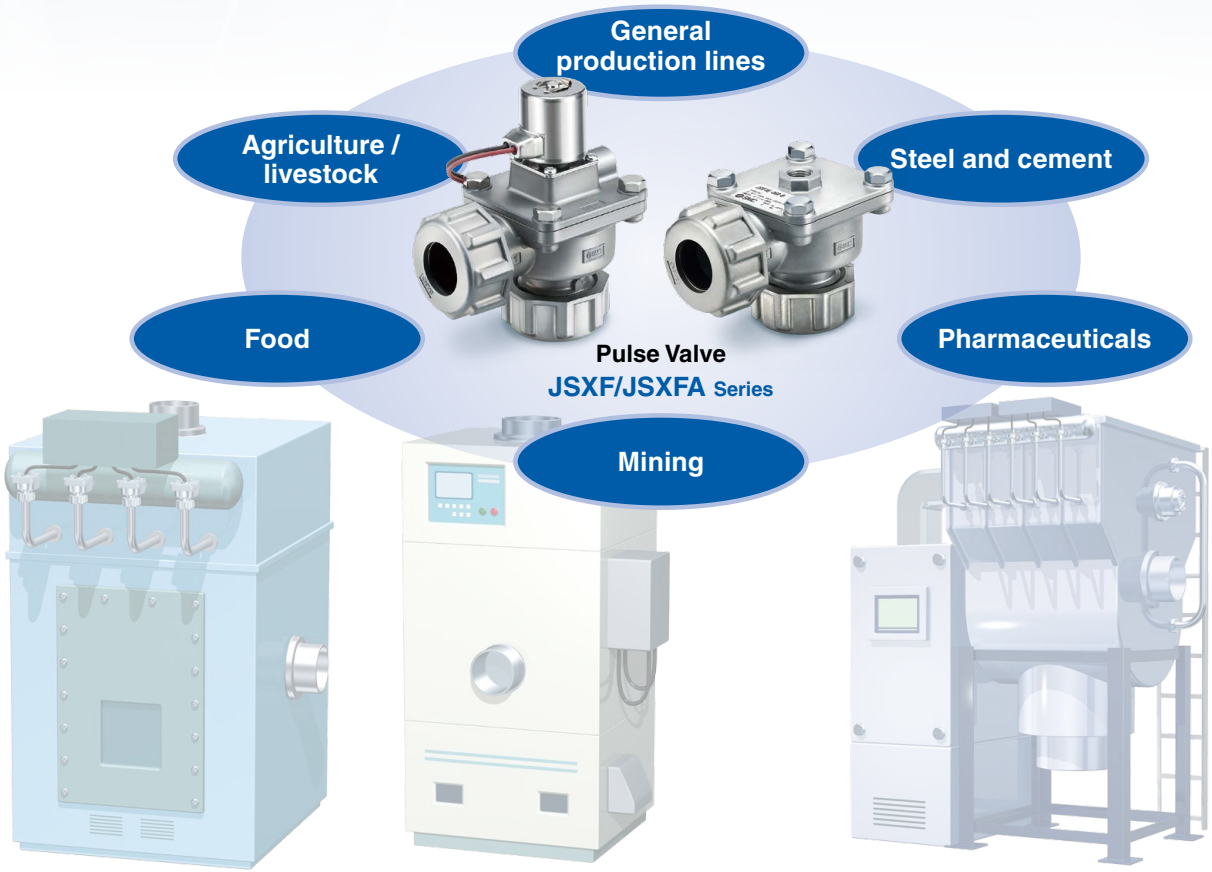

## Series Variations

| Type | Piping | Port size | Orifice diameter (ø32 / ø40 / ø45 / ø50 / ø55) | Thread type | Options/ Made to order | Standards (CE*1, UKCA*1, ATEX compliant) |
|---|---|---|---|---|---|---|
| Solenoid valve 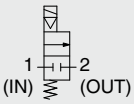  p. 5 | Compression fitting type  JSXFE Series | 3/4 (20A) | ø32 | Rc NPT G | Options · Silencer (3/4, 1, 1 1/2, 2) · Cable for M12 connector (1000, 2000, 5000 mm) p. 14 Made to order · Tank hole dia.: ø76 (1 1/2 6-inch tank) | ● ● |
| | | 1 (25A) | ø40 | | | ● ● |
| | | 1 1/2 (40A) | ø50 | | | ● ● |
| | Direct piping type  JSXFF Series | 3/4 (20A) | ø32 | | | ● ● |
| | | 1 (25A) | ø40 | | | ● ● |
| | | 1 1/2 (40A) | ø50 | | | ● ● |
| | Immersion type  JSXFH Series | 3/4 (20A) Tank size: 4, 5 inch | ø32 | | | ● ● |
| | | 1 (25A) Tank size: 5, 6 inch | ø40 | | | ● ● |
| | | 1 1/2 (40A) Tank size: 6, 8 inch | ø45 | | | ● ● |
| | | 2 (50A) Tank size: 8, 10 inch | ø55 | | | ● ● |
| Air operated 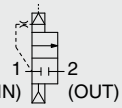  p. 15 | Compression fitting type  (55-)JSXFAE Series | 3/4 (20A) | ø32 | | Option · Silencer (1 1/2, 2) Made to order · Tank hole dia.: ø76 (1 1/2 6-inch tank) p. 27 · Special pilot valve orifice diameter (3/4, 1) p. 15 | ● p. 29 |
| | | 1 (25A) | ø40 | | | ● p. 29 |
| | | 1 1/2 (40A) | ø50 | | | ● p. 29 |
| | Direct piping type  (55-)JSXFAF Series | 3/4 (20A) | ø32 | | | ● p. 29 |
| | | 1 (25A) | ø40 | | | ● p. 29 |
| | | 1 1/2 (40A) | ø50 | | | ● p. 29 |
| | Immersion type  JSXFAH Series | 3/4 (20A) Tank size: 4, 5 inch | ø32 | | | |
| | | 1 (25A) Tank size: 5, 6 inch | ø40 | | | |
| | | 1 1/2 (40A) Tank size: 6, 8 inch | ø45 | | | |
| | | 2 (50A) Tank size: 8, 10 inch | ø55 | | | |

*1 Differs depending on the voltage and electrical entry. For details, refer to page 5.

# CONTENTS

## Pulse Valve **Valve for Dust Collector**

Compression fitting type

Direct piping type

Immersion type



Compression fitting type

Direct piping type

Immersion type

# Pulse Valve Valve for Dust Collector

## Solenoid Valve Type

# JSXF Series

Differs depending on the voltage and electrical entry

RoHS

Air Operated Type ▸ p. 15

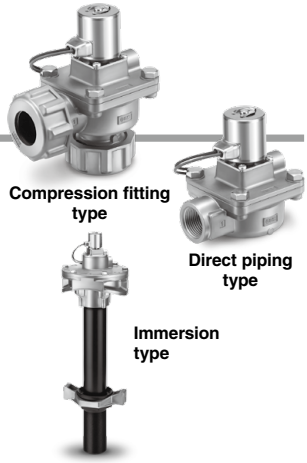


## How to Order

| | | ❶ | ❷ | ❸ | | ❹ | ❺ | | ❻ | | ❼ | ❽ | ❾ | | ❿ |
|---|---|---|---|---|---|---|---|---|---|---|---|---|---|---|---|
| Compression | JSXF | | E | | – | 06 | R | – | | | 5 | CS | B | – | S |
| Direct Piping | JSXF | | F | | – | 06 | R | – | | | 5 | CS | B | – | S |
| Immersion | JSXF | | H | 4 | – | 06 | R | – | 1 | | 5 | CS | B | – | S |

### ❶ Valve type

| | | |
|---|---|---|
| Nil | Solenoid valve | 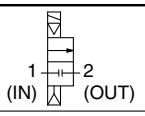 |



### ❷ Piping

| | | |
|---|---|---|
| E | Compression fitting type*1 |  |
| F | Direct piping type |  |
| H | Immersion type*2 |  |

*1 Seals and washers are included.
*2 The valve and pipe are not assembled in the package.

### ❸ Tank size (JSXFH only)

| | |
|---|---|
| 4 | 4 inch |
| 5 | 5 inch |
| 6 | 6 inch |
| 8 | 8 inch |
| 10 | 10 inch |

### ❹ Port size*1

| | |
|---|---|
| 06 | 3/4 (20A) |
| 10 | 1 (25A) |
| 14 | 1 1/2 (40A) |
| 20*2 | 2 (50A) |

*1 For port size selection, refer to the "Variations for port size and option" table below.
*2 Port size 20 is only available for the JSXFH.

### ❺ Thread type

| | |
|---|---|
| R | Rc |
| N | NPT |
| F | G |

### ❻ OUT port piping configuration (JSXFH only)

| Symbol | Length | G thread | Appearance |
|---|---|---|---|
| 1 | Short | None | 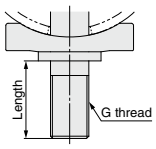 |
| 2 | Long | | |
| 3 | Short | Yes | |
| 4 | Long | | |



### ❼ Rated voltage

**AC**

| Symbol | Rated voltage |
|---|---|
| 1 | 100 VAC |
| 2 | 200 VAC |
| 3 | 120 VAC (110 VAC) |
| 4 | 220 VAC |
| 7 | 240 VAC |
| J | 230 VAC |

**DC**

| Symbol | Rated voltage |
|---|---|
| 5 | 24 VDC |

### ❽ Electrical entry

| Symbol | Electrical entry | | CE/UKCA-compliant |
|---|---|---|---|
| G | Grommet*1 |  | 24 VDC |
| GS | Grommet with PCB (With surge voltage suppressor) |  | 100 VAC<br>24 VDC |
| CS | Conduit (With surge voltage suppressor) |  | All voltages |
| DS | DIN terminal (With surge voltage suppressor) |  | All voltages |
| DZ | DIN terminal with light (With surge voltage suppressor) |  | All voltages |
| DN | DIN terminal without connector (With surge voltage suppressor) |  | All voltages |
| WN | M12 connector*2 (With surge voltage suppressor) |  | All voltages |

*1 Only 24 VDC can be selected for the rated voltage.
*2 A cable for the M12 connector is not included with the product. Refer to the "Option" on page 14 to order it separately.

### ❾ Fluid and ambient temperatures

| | |
|---|---|
| B | –40 to 60°C |

### ❿ Silencer

| | |
|---|---|
| Nil | Without |
| S | With |

Shipped together with the product

Made to Order

### Made to Order

| | |
|---|---|
| Tank hole dia.: ø76 (Port size 14, 6-inch tank) | p. 27 |

### Variations for Port Size and Option

| Model | Tank size | Port size 06 | 10 | 14 | 20 |
|---|---|---|---|---|---|
| JSXFE | — | ● | ● | ● | — |
| JSXFF | — | ● | ● | ● | — |
| JSXFH | 4 inch | ● | — | — | — |
| | 5 inch | ● | ● | — | — |
| | 6 inch | — | ● | ● | — |
| | 8 inch | — | — | ● | ● |
| | 10 inch | — | — | — | ● |
| Silencer | | ● | ● | ● | ● |

## Specifications

### Common Specifications

| | | | |
|---|---|---|---|
| Valve specifications | Valve construction | | Pilot operated diaphragm |
| | Valve type | | Normally closed (N.C.) |
| | Fluid | | Air |
| | Withstand pressure [MPa] | | 1.5 |
| | Min. operating pressure differential [MPa] | | 0.1 |
| | Max. operating pressure differential [MPa] | | 0.9 |
| | Max. system pressure [MPa] | | 0.9 |
| | Fluid temperature [°C] | | –40*1 to 60 |
| | Ambient temperature [°C] | | –40 to 60 |
| | Enclosure | | IP67 (IP65 for the DIN connector)*2 |
| | Standards*3 | | CE/UKCA |
| Coil specifications | Allowable voltage fluctuation | | ±10% of the rated voltage |
| | Allowable leakage voltage | AC | 5% or less of the rated voltage |
| | | DC | 2% or less of the rated voltage |
| | Apparent power*4, *5 | AC | 18 VA |
| | Power consumption*4 | DC | 12 W |

*1 No condensation
*2 If water enters the product, it may result in operation failure or breakage.
Therefore, take appropriate measures to prevent water from entering the product when used in an environment where it is constantly exposed to water.
*3 Conformance to standards varies depending on the model. For details, refer to page 5.
*4 Power consumption/Apparent power: The value at an ambient temperature of 20°C and when the rated voltage is applied (Variation: ±10%)
*5 There is no difference in the frequency and the inrush and energized apparent power, since a rectifying circuit is used in the AC.

**Be sure to read the "Specific Product Precautions" before handling.**

JSXFE Series

### Individual Specifications: Compression Fitting Type / Direct Piping Type

| Series | | JSXFE/F | | |
|---|---|---|---|---|
| | | 06 | 10 | 14 |
| Orifice diameter [mm] | | ø32 | ø40 | ø50 |
| Port size | | 3/4 | 1 | 1 1/2 |
| Weight*1 [g] | Compression | 740 | 1,230 | 2,100 |
| | Direct piping | 560 | 820 | 1,480 |

*1 Indicates case of grommet type
Add 20 g for grommet with PCB, 70 g for conduit, 50 g for DIN terminal, and 15 g for M12 connector.

JSXFF Series

### Individual Specifications: Immersion Type

| Series | | | JSXFH | | | | | | | |
|---|---|---|---|---|---|---|---|---|---|---|
| | | | 06 | | 10 | | 14 | | 20 | |
| Orifice diameter [mm] | | | ø32 | | ø40 | | ø45 | | ø55 | |
| Port size | | | 3/4 | | 1 | | 1 1/2 | | 2 | |
| Tank size | | ANSI | 4 | 5 | 5 | 6 | 6 | 8 | 8 | 10 |
| Weight*1 [g] | Piping configuration | 1 | 1,380 | 1,390 | 2,050 | 2,110 | 2,960 | 3,080 | 4,670 | 4,840 |
| | | 2 | 1,410 | 1,430 | 2,100 | 2,210 | 3,120 | 3,310 | 4,990 | 5,150 |
| | | 3 | 1,380 | 1,390 | 2,050 | 2,110 | 2,960 | 3,080 | 4,670 | 4,840 |
| | | 4 | 1,410 | 1,430 | 2,100 | 2,210 | 3,120 | 3,310 | 4,990 | 5,150 |

*1 Indicates case of grommet type
Add 20 g for grommet with PCB, 70 g for conduit, 50 g for DIN terminal, and 15 g for M12 connector.

JSXFH Series

## Construction

### JSXFE/Compression Fitting Type

#### Port sizes 06, 10

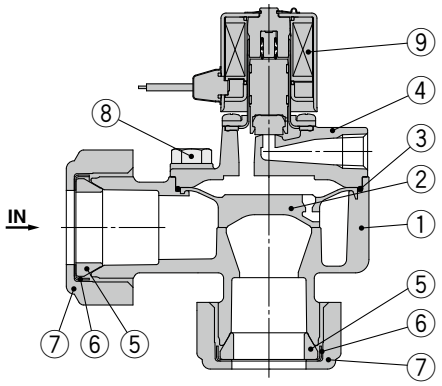


**Component Parts**

| No. | Description | Material |
|---|---|---|
| 1 | **Body** | ADC |
| 2 | **Main valve** | Resin |
| 3 | **O-ring** | NBR |
| 4 | **Bonnet** | ADC |
| 5 | **Seal** | NBR |
| 6 | **Washer** | Fe (Chromating) |
| 7 | **Compression nut** | ADC |
| 8 | **Hexagon bolt** | Stainless steel |
| 9 | **Pilot valve** | — |

#### Port size 14

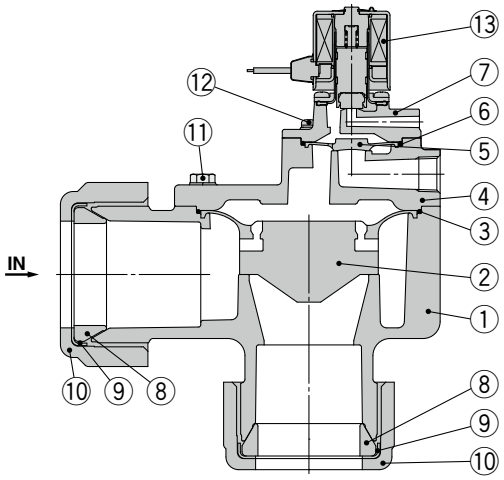


**Component Parts**

| No. | Description | Material |
|---|---|---|
| 1 | **Body** | ADC |
| 2 | **Main valve** | Resin |
| 3 | **O-ring** | NBR |
| 4 | **Bonnet** | ADC |
| 5 | **Sub-valve** | Resin |
| 6 | **O-ring** | NBR |
| 7 | **Bonnet** | ADC |

| No. | Description | Material |
|---|---|---|
| 8 | **Seal** | NBR |
| 9 | **Washer** | Fe (Chromating) |
| 10 | **Compression nut** | ADC |
| 11 | **Hexagon bolt** | Stainless steel |
| 12 | **Cross recessed round head screw** | Stainless steel |
| 13 | **Pilot valve** | — |

### JSXFF/Direct Piping Type

#### Port sizes 06, 10

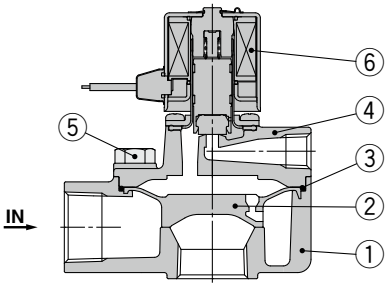


**Component Parts**

| No. | Description | Material |
|---|---|---|
| 1 | **Body** | ADC |
| 2 | **Main valve** | Resin |
| 3 | **O-ring** | NBR |
| 4 | **Bonnet** | ADC |
| 5 | **Hexagon bolt** | Stainless steel |
| 6 | **Pilot valve** | — |

#### Port size 14

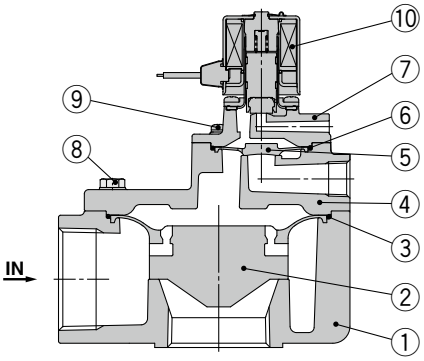


**Component Parts**

| No. | Description | Material |
|---|---|---|
| 1 | **Body** | ADC |
| 2 | **Main valve** | Resin |
| 3 | **O-ring** | NBR |
| 4 | **Bonnet** | ADC |
| 5 | **Sub-valve** | Resin |
| 6 | **O-ring** | NBR |
| 7 | **Bonnet** | ADC |
| 8 | **Hexagon bolt** | Stainless steel |
| 9 | **Cross recessed round head screw** | Stainless steel |
| 10 | **Pilot valve** | — |

## Construction

### JSXFH/Immersion Type

#### Port sizes 06, 10

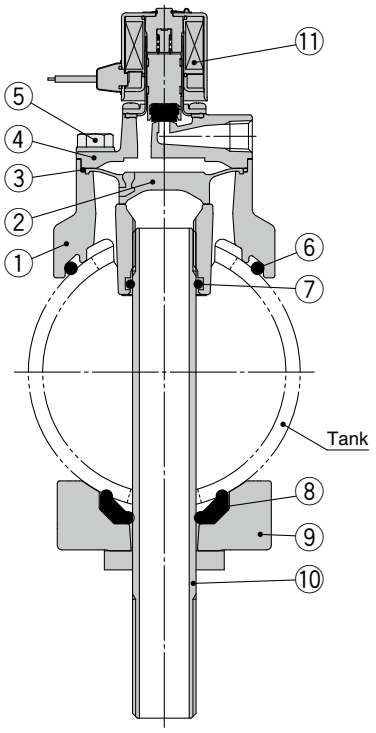


∗ The tank should be provided by the customer.

**Component Parts**

| No. | Description | Material |
|---|---|---|
| 1 | **Body** | ADC |
| 2 | **Main valve** | Resin |
| 3 | **O-ring** | NBR |
| 4 | **Bonnet** | ADC |
| 5 | **Hexagon bolt** | Stainless steel |
| 6 | **O-ring** | NBR |
| 7 | **O-ring** | NBR |
| 8 | **Gasket** | NBR |
| 9 | **Bottom support** | ADC |
| 10 | **Outlet pipe assembly** | STKM + SS400 |
| 11 | **Pilot valve** | — |

#### Port sizes 14, 20

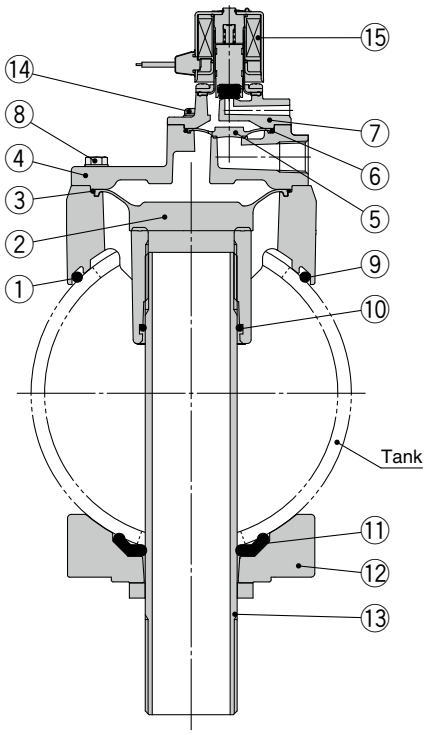


∗ The tank should be provided by the customer.

**Component Parts**

| No. | Description | Material |
|---|---|---|
| 1 | **Body** | ADC |
| 2 | **Main valve** | Resin |
| 3 | **O-ring** | NBR |
| 4 | **Bonnet** | ADC |
| 5 | **Sub-valve** | Resin |
| 6 | **O-ring** | NBR |
| 7 | **Bonnet** | ADC |
| 8 | **Hexagon bolt** | Stainless steel |
| 9 | **O-ring** | NBR |
| 10 | **O-ring** | NBR |
| 11 | **Gasket** | NBR |
| 12 | **Bottom support** | ADC |
| 13 | **Outlet pipe assembly** | STKM + SS400 |
| 14 | **Cross recessed round head screw** | Stainless steel |
| 15 | **Pilot valve** | — |

## Dimensions: JSXFE/Compression Fitting Type

### G: Grommet

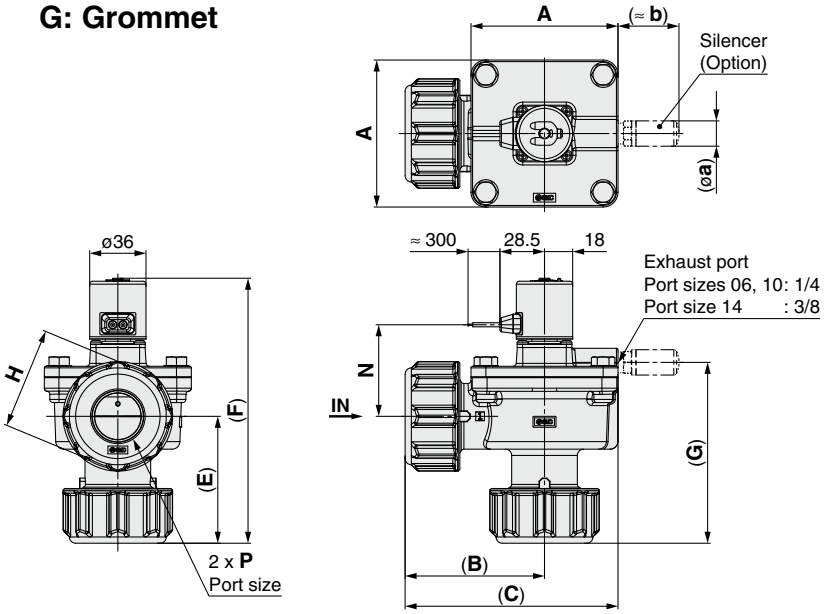


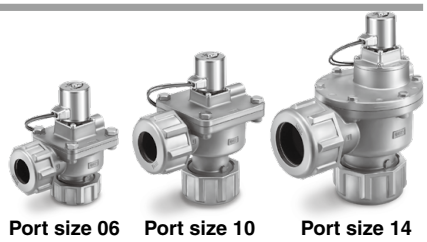


### GS: Grommet with PCB

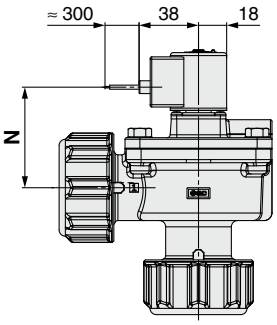


### CS: Conduit

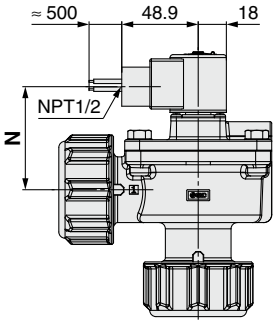


### DS: DIN terminal
### DZ: DIN terminal with light

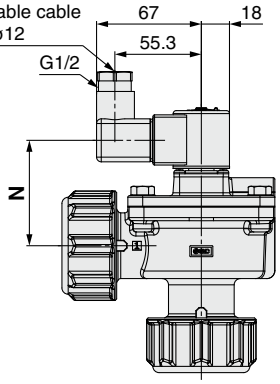


### DN: Without DIN connector

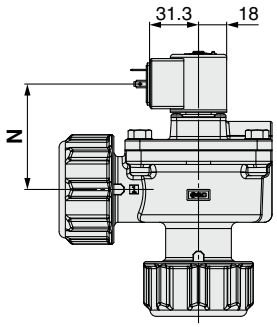


### WN: M12 connector

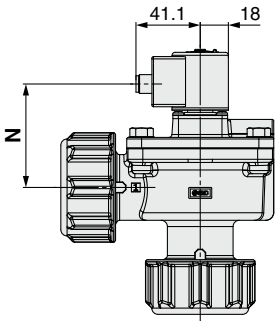


### Dimensions

[mm]

| Model | Port size P | A | (B) | (C) | (E) | (F) | (G) | H | J | K | L | M |
|---|---|---|---|---|---|---|---|---|---|---|---|---|
| **JSXFE-06** | 3/4 | 74 | 76 | 113 | 54 | 136 | 82 | 54 | 25.4 | 41.3 | 25.4 | 18.8 |
| **JSXFE-10** | 1 | 94 | 90 | 137 | 82 | 170 | 116 | 65 | 33.3 | 44.4 | 38.1 | 31.6 |
| **JSXFE-14** | 1 1/2 | ø126 | 117 | 178 | 92 | 217 | 139 | 80 | 51.3 | 50.7 | 45 | 33 |

Dimension in ( ) shows the dimension after tightening.

| Model | Port size P | Grommet | Grommet with PCB | Conduit | DIN terminal | Without DIN connector | M12 connector | With silencer | |
|---|---|---|---|---|---|---|---|---|---|
| | | N | | | | | | a | b |
| **JSXFE-06** | 3/4 | 52.6 | 58.3 | 59.9 | 61.4 | 61.4 | 60.2 | 16.5 | 39 |
| **JSXFE-10** | 1 | 58.6 | 64.3 | 65.9 | 67.4 | 67.4 | 66.2 | | |
| **JSXFE-14** | 1 1/2 | 95.6 | 101.3 | 102.9 | 104.4 | 104.4 | 103.2 | 20 | 52 |

## Dimensions: JSXFF/Direct Piping Type

### G: Grommet

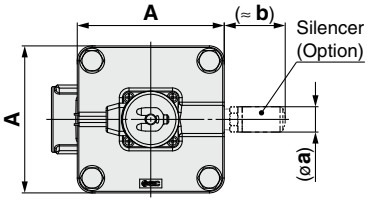


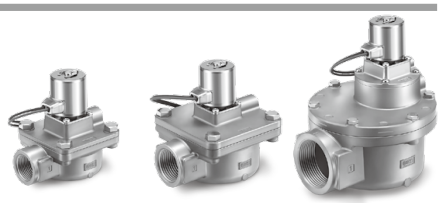

Port size 06 Port size 10 Port size 14

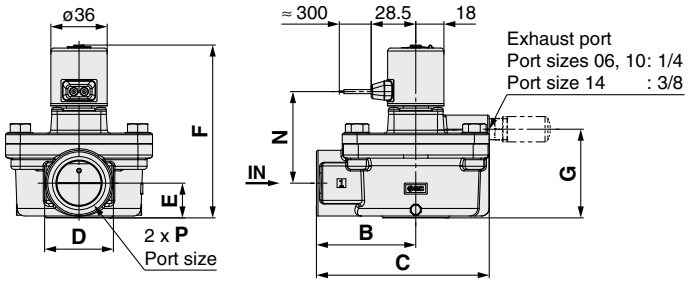


### GS: Grommet with PCB

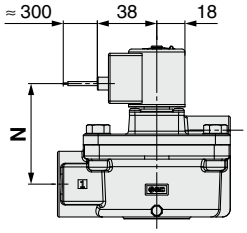


### CS: Conduit

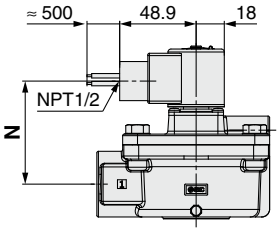


### DS: DIN terminal
### DZ: DIN terminal with light

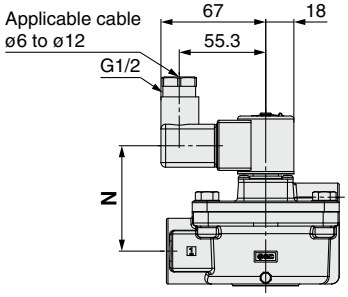


### DN: Without DIN connector

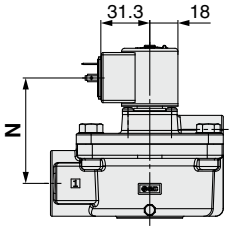


### WN: M12 connector

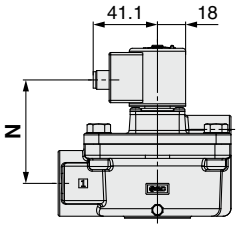


### Dimensions

[mm]

| Model | Port size P | A | B | C | D | E | F | G |
|---|---|---|---|---|---|---|---|---|
| **JSXFF-06** | 3/4 | 74 | 55.5 | 92.5 | 36 | 19.3 | 101.6 | 47.8 |
| **JSXFF-10** | 1 | 94 | 63.5 | 110.5 | 44 | 22.2 | 110.5 | 56.7 |
| **JSXFF-14** | 1 1/2 | ø126 | 75.1 | 136.6 | 65 | 32 | 157.3 | 79 |

| Model | Port size P | Grommet | Grommet with PCB | Conduit | DIN terminal | Without DIN connector | M12 connector | With silencer | |
|---|---|---|---|---|---|---|---|---|---|
| | | N | | | | | | a | b |
| **JSXFF-06** | 3/4 | 52.6 | 58.3 | 59.9 | 61.4 | 61.4 | 60.2 | 16.5 | 39 |
| **JSXFF-10** | 1 | 58.6 | 64.3 | 65.9 | 67.4 | 67.4 | 66.2 | | |
| **JSXFF-14** | 1 1/2 | 95.6 | 101.3 | 102.9 | 104.4 | 104.4 | 103.2 | 20 | 52 |

## Dimensions: JSXFH/Immersion Type

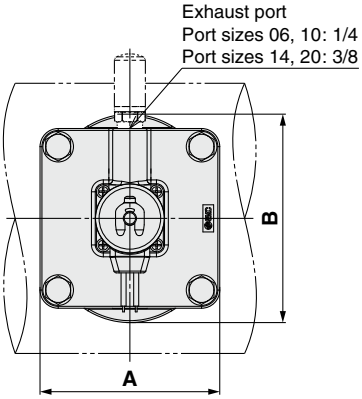


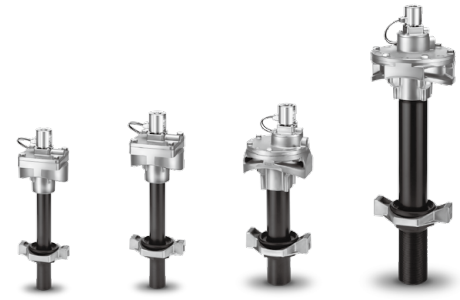

Port size 06 | Port size 10 | Port size 14 | Port size 20

### G: Grommet

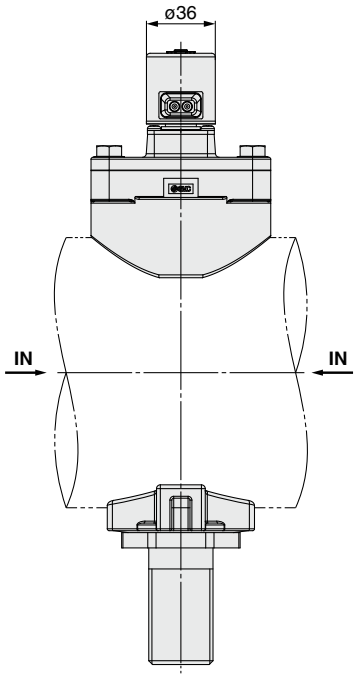


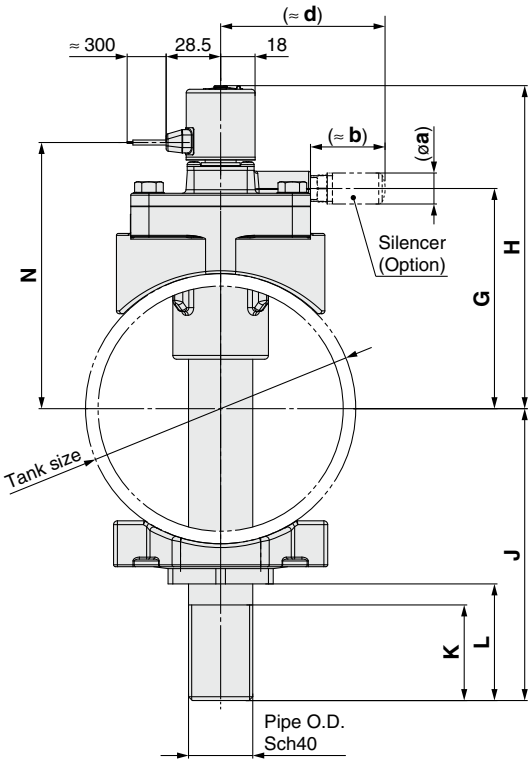


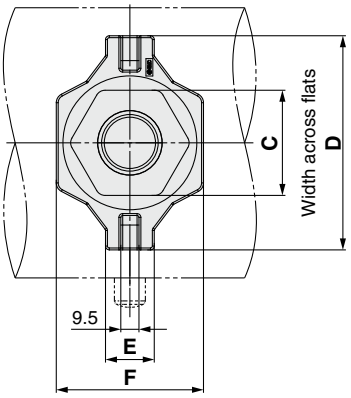


### Dimensions

| Model | Port size | Tank size | Pipe O.D. | A | B | C | D | E | F | G | H |
|---|---|---|---|---|---|---|---|---|---|---|---|
| JSXFH4-06 | 3/4 | 4 inch (ANSI 4") | ø26.7 (ANSI 3/4") | 90 | 93 | 46 | 90 | 25.5 | 63 | 99 | 153 |
| JSXFH5-06 | | 5 inch (ANSI 5") | | | | | | | | 113 | 166 |
| JSXFH5-10 | 1 | | ø33.6 (ANSI 1") | 94 | 109 | 55 | 112 | 25.5 | 77 | 115 | 168 |
| JSXFH6-10 | | 6 inch (ANSI 6") | | | | | | | | 128 | 182 |
| JSXFH6-14 | 1 1/2 | | ø48.3 (ANSI 1 1/2") | 131 | 131 | 65 | 130 | 34.5 | 90 | 124 | 202 |
| JSXFH8-14 | | 8 inch (ANSI 8") | | | | | | | | 150 | 228 |
| JSXFH8-20 | 2 | | ø60.3 (ANSI 2") | 168 | 170 | 80 | 160 | 34.5 | 108 | 165 | 243 |
| JSXFH10-20 | | 10 inch (ANSI 10") | | | | | | | | 192 | 270 |

| Model | Port size | OUT port piping configuration | | | | | | | | | | | |
|---|---|---|---|---|---|---|---|---|---|---|---|---|---|
| | | 1 | | | 2 | | | 3 | | | 4 | | |
| | | J | K | L | J | K | L | J | K | L | J | K | L |
| JSXFH4-06 | 3/4 | 146 ±5 | — | 62 | 164 ±5 | — | 80 | 146 ±5 | G3/4" x 50 | 62 | 164 ±5 | G3/4" x 70 | 80 |
| JSXFH5-06 | | 153 ±5 | | 56 | 173 ±5 | | 76 | 153 ±5 | G3/4" x 50 | 56 | 173 ±5 | G3/4" x 70 | 76 |
| JSXFH5-10 | 1 | 153 ±5 | | 61 | 173 ±5 | | 81 | 153 ±5 | G1" x 50 | 61 | 173 ±5 | G1" x 70 | 81 |
| JSXFH6-10 | | 173 ±5 | | 68 | 213 ±5 | | 108 | 173 ±5 | G1" x 50 | 68 | 213 ±5 | G1" x 90 | 108 |
| JSXFH6-14 | 1 1/2 | 169 ±5 | | 61 | 209 ±5 | | 101 | 169 ±5 | G1 1/2" x 50 | 61 | 209 ±5 | G1 1/2" x 90 | 101 |
| JSXFH8-14 | | 198 ±5 | | 65 | 258 ±5 | | 125 | 198 ±5 | G1 1/2" x 50 | 65 | 258 ±5 | G1 1/2" x 110 | 125 |
| JSXFH8-20 | 2 | 197 ±5 | | 60 | 257 ±5 | | 120 | 197 ±5 | G2" x 50 | 60 | 257 ±5 | G2" x 110 | 120 |
| JSXFH10-20 | | 224 ±5 | | 60 | 284 ±5 | | 120 | 224 ±5 | G2" x 50 | 60 | 284 ±5 | G2" x 110 | 120 |

## Dimensions: JSXFH/Immersion Type

### GS: Grommet with PCB

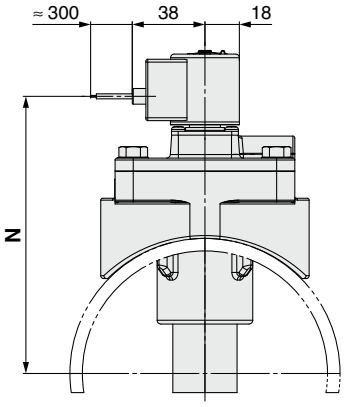


### CS: Conduit

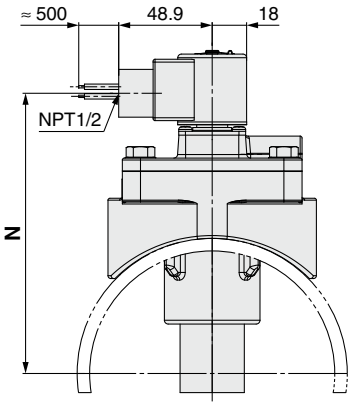


### DS: DIN terminal
### DZ: DIN terminal with light

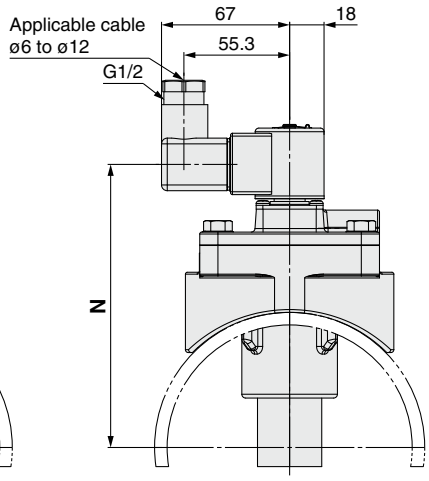


### DN: Without DIN connector

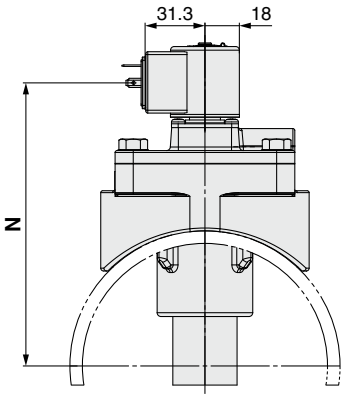


### WN: M12 connector

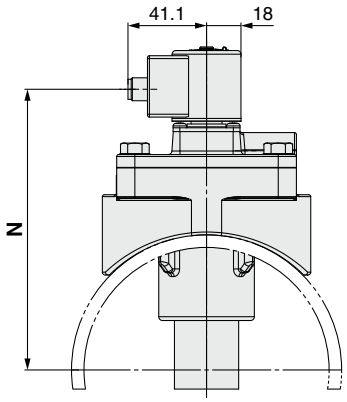


### Recommended Tank Dimensions

∗ The tank should be provided by the customer.

**Tank hole pitch**

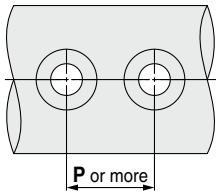


**Tank hole machining**

**Straight hole**

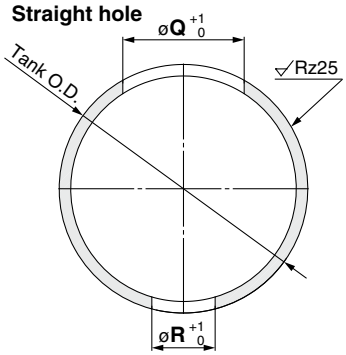


**Tapered hole**

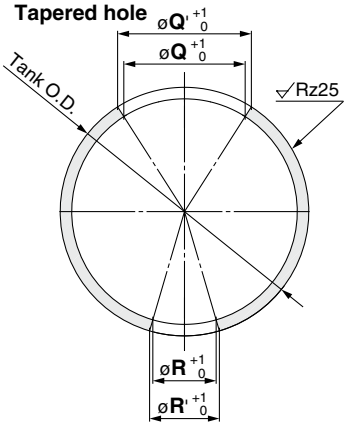


### Dimensions

[mm]

| Model | Port size | Grommet | Grommet with PCB | Conduit | DIN terminal | Without DIN connector | M12 connector | With silencer | | |
|---|---|---|---|---|---|---|---|---|---|---|
| | | N | | | | | | a | b | d |
| JSXFH4-06 | 3/4 | 123 | 129 | 131 | 132 | 132 | 131 | 16.5 | 39 | 76 |
| JSXFH5-06 | | 137 | 142 | 144 | 146 | 146 | 144 | | | |
| JSXFH5-10 | 1 | 139 | 144 | 146 | 148 | 148 | 146 | | | 86 |
| JSXFH6-10 | | 152 | 158 | 160 | 161 | 161 | 160 | | | |
| JSXFH6-14 | 1 1/2 | 173 | 178 | 180 | 182 | 182 | 180 | 20 | 52 | 114 |
| JSXFH8-14 | | 198 | 204 | 205 | 207 | 207 | 206 | | | |
| JSXFH8-20 | 2 | 213 | 219 | 220 | 222 | 222 | 221 | | | 95 |
| JSXFH10-20 | | 240 | 246 | 247 | 249 | 249 | 248 | | | |

### Recommended Tank Dimensions

[mm]

| Model | Port size | Tank size | Tank O.D. | Tank hole pitch P | Straight hole Q | Straight hole R | Tapered hole Q | Tapered hole Q' | Tapered hole R | Tapered hole R' |
|---|---|---|---|---|---|---|---|---|---|---|
| JSXFH4-06 | 3/4 | 4 inch (ANSI 4") | ø114.3 $^{+1.6}_{-0.8}$ | 95 | 55 | 28 | 55 | 61.5 | 28 | 31.3 |
| JSXFH5-06 | | 5 inch (ANSI 5") | ø141.3 $^{+1.6}_{-0.8}$ | | | | | | | |
| JSXFH5-10 | 1 | | | 100 | 69 | 36 | 69 | 76 | 36 | 39.7 |
| JSXFH6-10 | | 6 inch (ANSI 6") | ø168.3 $^{+1.6}_{-0.8}$ | | | | | | | |
| JSXFH6-14 | 1 1/2 | | | 135 | 95 | 52 | 95 | 104 | 52 | 56.8 |
| JSXFH8-14 | | 8 inch (ANSI 8") | ø219.1 $^{+1.6}_{-0.8}$ | | | | | | | |
| JSXFH8-20 | 2 | | | 175 | 117 | 62 | 117 | 126 | 62 | 67 |
| JSXFH10-20 | | 10 inch (ANSI 10") | ø273.1 $^{+2.4}_{-0.8}$ | | | | | | | |

## Replacement Parts (Solenoid Valve Type/JSXF□)

| Port size | Model | Replacement part number | | | |
|---|---|---|---|---|---|
| | | Main valve assembly (Main valve + O-ring) | Sub-valve assembly (Sub-valve + O-ring) | Silencer | Solenoid coil*1 |
| 06 | **JSXF(E, F, H)□-06□-□□B-(S)** | JSXF-06B-KT | — | Rc, G thread: AN20-02<br>NPT thread: AN20-N02 | JSXF□□-□□-□□B-KT1<br>Valve part number |
| 10 | **JSXF(E, F, H)□-10□-□□B-(S)** | JSXF-10B-KT | — | | |
| 14 | **JSXF(E, F)□-14□-□□B-(S)** | JSXF-14B-KT | JSXF-14B-KT2 | Rc, G thread: AN30-03<br>NPT thread: AN30-N03 | |
| | **JSXFH□-14□-□□B-(S)** | JSXF-14B-1-KT | | | |
| 20 | **JSXFH□-20□-□□B-(S)** | JSXF-20B-KT | JSXF-14B-KT2 | | |

*1 The solenoid coil has a name plate with the product part number printed on it. In addition, the name plate has the marks of all applicable standards printed on it.
For the solenoid coil, eligibility for CE marking standard certification varies depending on the electrical entry type and the rated voltage.
When ordering a solenoid coil with different specifications than the valve currently in use, refer to the "How to Order" in the catalog to confirm the status of standard compliance.

## Disassembly/Assembly Procedure

## ⚠Caution

1. **Before disassembly, be sure to turn OFF the power supply and pressure supply, and then release the residual pressure.**
2. **Confirm that the solenoid coil temperature has dropped sufficiently before removing the product.**

### Disassembly

1) Remove the clip, and then remove the solenoid coil.
2) Loosen the hexagon bolts (cross recessed round head screws), and remove the bonnet assembly (bonnet), O-ring, and the main valve (sub-valve).

### Assembly

1) Attach the main valve (sub-valve) to the body. The main valve (sub-valve) has a predetermined mounting direction. **Assemble the valve referring to Fig. 1.**
If the valve is assembled incorrectly, it can cause a malfunction.
2) Mount the O-ring to the body groove. (See Fig. 2.)
After mounting the O-ring, check to make sure that the O-ring is fitted properly into the groove. If it is not in the groove, external leakage and/or operation failure may occur.
3) Attach the bonnet assembly (bonnet) to the body.
4) Tighten the hexagon bolts (cross recessed round head screws) diagonally. (See Table 1 for the tightening torque.)
5) Secure the solenoid coil with a clip. (For details, refer to the "Specific Product Precautions" on page 38.)

**Table 1 Proper Tightening Torque** [N·m]

| | | | |
|---|---|---|---|
| JSXF□-06□ | | M8 | 12.5 to 13.8 |
| JSXF□-10□ | | M8 | 12.5 to 13.8 |
| JSXF□-14□ | Main valve | M6 | 5.2 to 5.7 |
| | Sub-valve | M4 | 1.5 to 1.7 |
| JSXF□-20□ | Main valve | M8 | 12.5 to 13.8 |
| | Sub-valve | M4 | 1.5 to 1.7 |

**Port sizes 06, 10** **Port sizes 14, 20**

**Main valve** **Main valve** **Sub-valve**

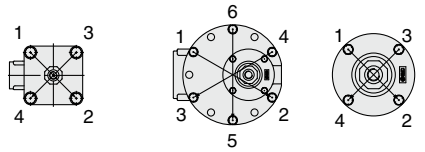


**Port sizes 06, 10**

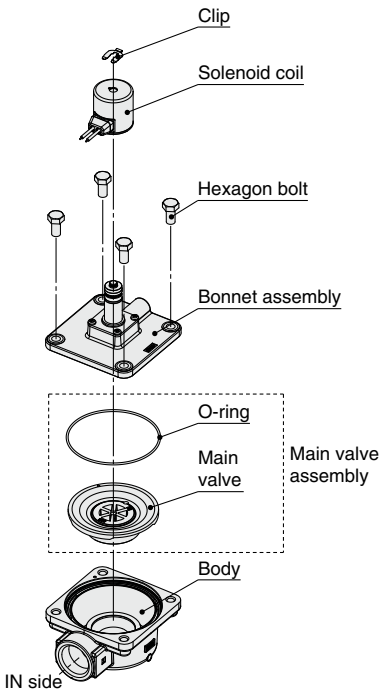


**Port sizes 14, 20**

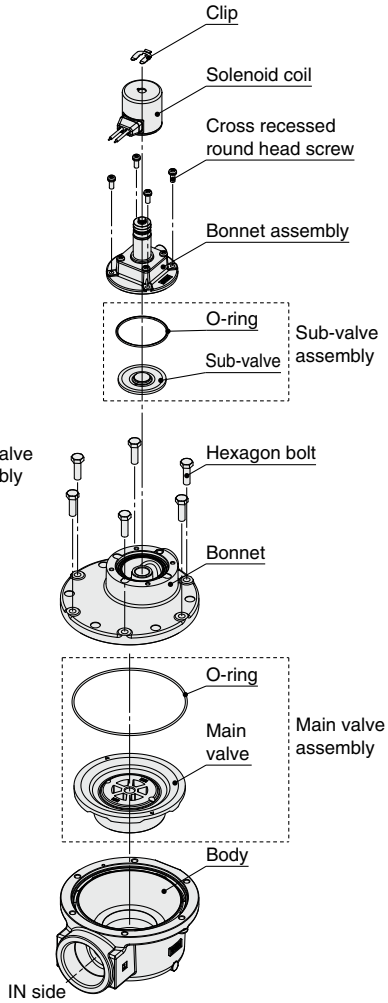


**Fig. 2 O-ring position**

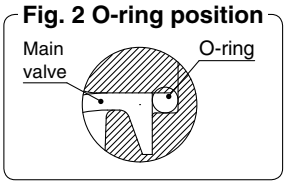


**Fig. 1 Valve position**

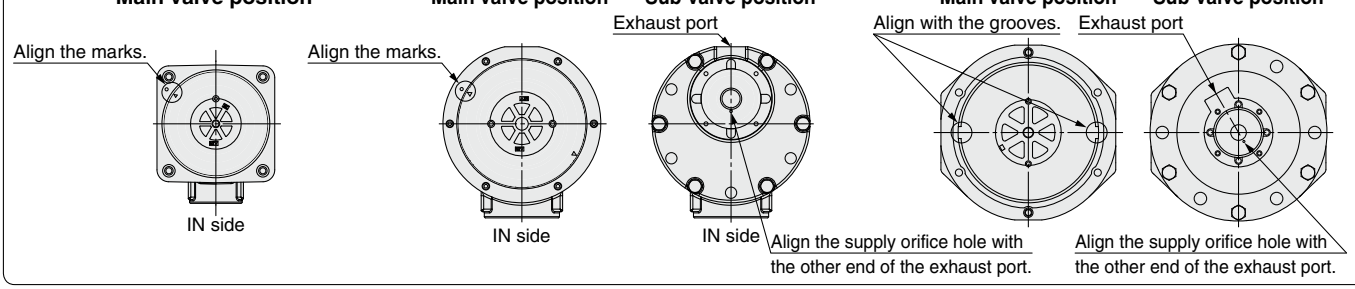

# Option

## Cable for M12 Connector (Female Connector with Cable)

The solenoid valve does not come with a cable for the M12 connector.
Please order it separately if necessary.

**JSX022 – 30 – 1 – 1**

**Specification**

| | |
|---|---|
| 1 | For DC voltages |
| 2 | For AC voltages |

**Cable length L [mm]**

| | |
|---|---|
| 1 | 1000 |
| 2 | 2000 |
| 5 | 5000 |

## Specifications

| Part number | | JSX022-30-1-□ | JSX022-30-2-□ |
|---|---|---|---|
| **Key type** | | A-coded | B-coded |
| **Rating/Performance** | **Rated current** | 4 A | |
| | **Rated voltage** | 250 V | |
| | **Contact resistance** | 40 mΩ or less | |
| | **Insulation resistance** | 1000 MΩ or more | |
| | **Withstand voltage** | 1500 VAC | |
| | **Operating temperature range** | –25 to 70°C | |
| | **Min. bending radius (Fixed)** | 50 mm | |
| | **Protection class** | IP67 (Only with screw tightened) | |
| | **Allowable repeated insertion/withdrawal** | 200 | |
| **Material** | **Material of knurl** | Brass (Ni plating) | |
| | **Contact (Surface treatment)** | Copper alloy (Au plating) | |
| | **Connector material** | PBT | |
| | **Cover** | Soft PBT | |

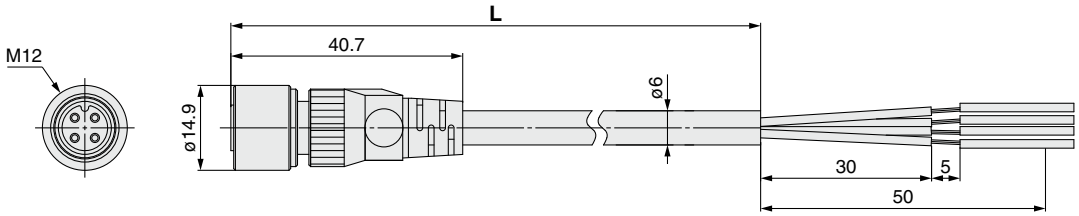


**For DC voltages (A-coded)**

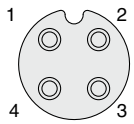


**Socket connector pin arrangement**

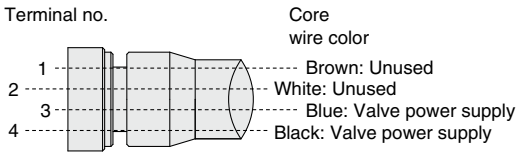


**Connections**

**For AC voltages (B-coded)**

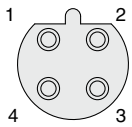


**Socket connector pin arrangement**

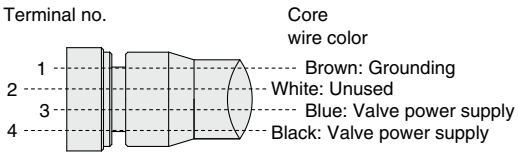


**Connections**

∗ The solenoid valve has no polarity for DC voltages.

# Pulse Valve Valve for Dust Collector

## Air Operated Type

# JSXFA Series

RoHS

Solenoid Valve Type ▶ p. 5

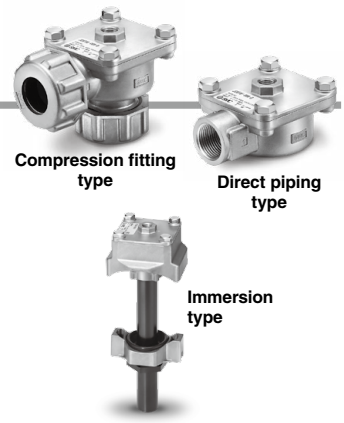


## How to Order

| | | | | | | | | | | | | |
|---|---|---|---|---|---|---|---|---|---|---|---|---|
| Compression | JSXF | A | E | | – | 06 | R | | – | B | – | 1 |
| Direct Piping | JSXF | A | F | | – | 06 | R | | – | B | – | 1 |
| Immersion | JSXF | A | H | 4 | – | 06 | R | 1 | – | B | – | 1 |
| | | ❶ | ❷ | ❸ | | ❹ | ❺ | ❻ | | ❼ | | ❽ ❾ |

### ❶ Valve type

| | | |
|---|---|---|
| A | Air operated | 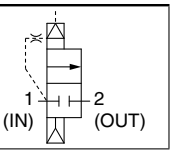 |



### ❷ Piping

| | | |
|---|---|---|
| E | Compression fitting type*1 |  |
| F | Direct piping type | 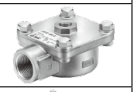 |
| H | Immersion type*2 |  |

*1 Seals and washers are included.
*2 The valve and pipe are not assembled in the package.

### ❸ Tank size (JSXFAH only)

| | |
|---|---|
| 4 | 4 inch |
| 5 | 5 inch |
| 6 | 6 inch |
| 8 | 8 inch |
| 10 | 10 inch |

### ❺ Thread type

| | |
|---|---|
| R | Rc |
| N | NPT |
| F | G |

### ❽ Silencer

(Only port size 14 and 20 can be selected.)

| | |
|---|---|
| Nil | Without |
| S | With |

Shipped together with the product

### ❾ Pilot port size

| | |
|---|---|
| Nil | 1/4 |
| 1 | 1/8 |

### ❹ Port size*1

| | |
|---|---|
| 06 | 3/4 (20A) |
| 10 | 1 (25A) |
| 14 | 1 1/2 (40A) |
| 20*2 | 2 (50A) |

*1 For port size selection, refer to the "Variations for port size and option" table below.
*2 Port size 20 is only available for the JSXFAH.

### ❻ OUT port piping configuration (JSXFAH only)

| Symbol | Length | G thread | Appearance |
|---|---|---|---|
| 1 | Short | None | 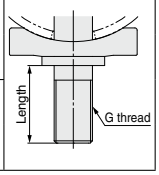 |
| 2 | Long | | |
| 3 | Short | Yes | |
| 4 | Long | | |



### ❼ Fluid and ambient temperatures

| | |
|---|---|
| B | –40 to 60°C |

Made to Order

### Made to Order

| | |
|---|---|
| Tank hole dia.: ø76 (Port size 14, 6-inch tank) | p. 27 |

## ⚠ Caution

### Pilot Valve Selection (JSXFA series common)

**For the pilot valve orifice diameter, ø5 mm or larger is recommended.**

The product may not operate correctly if the pilot valve orifice diameter is inadequate. (Port size: 3/4, 1)

Depending on the pilot piping port size*1 or length, the valve may not operate correctly.

*1 The I.D. of the pilot piping must be larger than the pilot valve orifice diameter to use. The max. pilot piping I.D. is 10 mm.

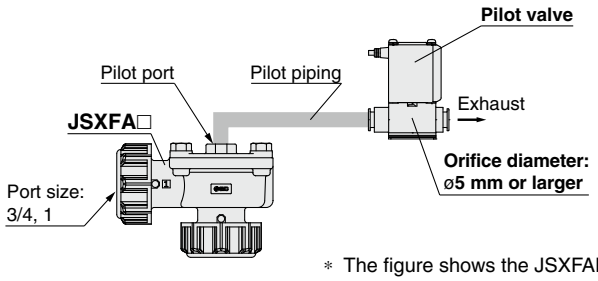


* The figure shows the JSXFAE.

## Made to Order (JSXFA series common)

When the pilot valve orifice diameter is ø3 mm or larger and less than ø5 mm, put "**A**" to the end of the product number for made-to-order.

**Pilot valve orifice diameter: Special specification**

| | | |
|---|---|---|
| A | For ø3 mm to ø5 mm | Port size: 06, 10 |

JSXFA □-□□-B-□□ A

Enter the standard product number.

### Variations for Port Size and Option

| Model | Tank size | Port size 06 | 10 | 14 | 20 |
|---|---|---|---|---|---|
| JSXFAE | — | ● | ● | ● | — |
| JSXFAF | — | ● | ● | ● | — |
| JSXFAH | 4 inch | ● | — | — | — |
| | 5 inch | ● | ● | — | — |
| | 6 inch | — | ● | ● | — |
| | 8 inch | — | — | ● | ● |
| | 10 inch | — | — | — | ● |
| Pilot valve orifice | | ● | ● | — | — |
| Silencer | | — | — | ● | ● |

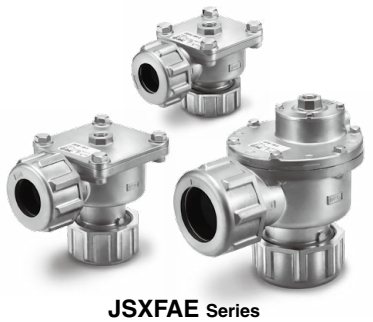

JSXFAE Series

JSXFAF Series

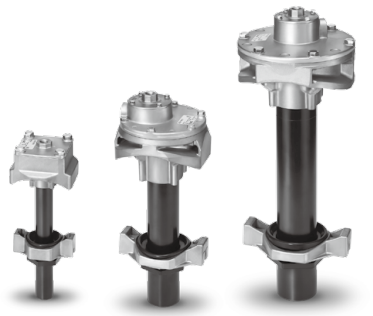

JSXFAH Series

## Specifications

### Common Specifications

| | | |
|---|---|---|
| Valve specifications | Fluid | Air |
| | Min. operating pressure differential [MPa] | 0.1 |
| | Max. operating pressure differential [MPa] | 0.9 |
| | Max. system pressure [MPa] | 0.9 |
| | Fluid temperature [°C] | –40*1 to 60 |
| | Ambient temperature [°C] | –40 to 60 |
| | Operating environment | Indoor/Outdoor*2 |

*1 No condensation
*2 For outdoor use, be sure to implement sufficient measures to protect the operational pilot valve from rain water.
Refer to the "2-Port Solenoid Valves for Fluid Control Precautions" for protective measures.
**Be sure to read the "Specific Product Precautions" before handling.**

### Individual Specifications: Compression Fitting Type / Direct Piping Type

| Series | | JSXFAE/F | | |
|---|---|---|---|---|
| | | 06 | 10 | 14 |
| Orifice diameter [mm] | | ø32 | ø40 | ø50 |
| Port size | | 3/4 | 1 | 1 1/2 |
| Weight [g] | Compression | 470 | 910 | 1,850 |
| | Direct piping | 290 | 500 | 1,230 |

### Individual Specifications: Immersion Type

| Series | | | JSXFAH | | | | | | | |
|---|---|---|---|---|---|---|---|---|---|---|
| | | | 06 | | 10 | | 14 | | 20 | |
| Orifice diameter [mm] | | | ø32 | | ø40 | | ø45 | | ø55 | |
| Port size | | | 3/4 | | 1 | | 1 1/2 | | 2 | |
| Tank size | | ANSI | 4 | 5 | 5 | 6 | 6 | 8 | 8 | 10 |
| Weight*3 [g] | Piping configuration | 1 | 1,110 | 1,120 | 1,730 | 1,790 | 2,710 | 2,830 | 4,420 | 4,590 |
| | | 2 | 1,140 | 1,160 | 1,780 | 1,890 | 2,870 | 3,060 | 4,740 | 4,900 |
| | | 3 | 1,110 | 1,120 | 1,730 | 1,790 | 2,710 | 2,830 | 4,420 | 4,590 |
| | | 4 | 1,140 | 1,160 | 1,780 | 1,890 | 2,870 | 3,060 | 4,740 | 4,900 |

*3 The tank weight is not included in the weight above.

## Construction

### JSXFAE/Compression Fitting Type

#### Port sizes 06, 10

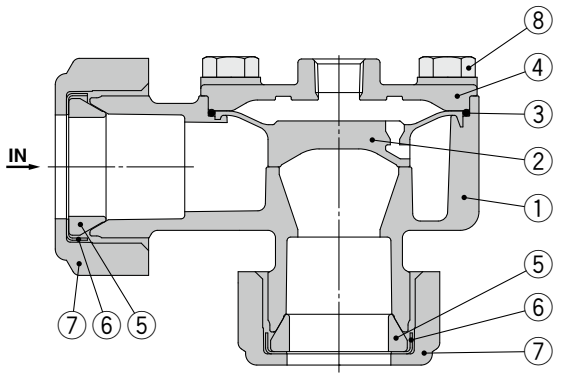


**Component Parts**

| No. | Description | Material |
|---|---|---|
| 1 | **Body** | ADC |
| 2 | **Main valve** | Resin |
| 3 | **O-ring** | NBR |
| 4 | **Bonnet** | ADC |
| 5 | **Seal** | NBR |
| 6 | **Washer** | Fe (Chromating) |
| 7 | **Compression nut** | ADC |
| 8 | **Hexagon bolt** | Stainless steel |

#### Port size 14

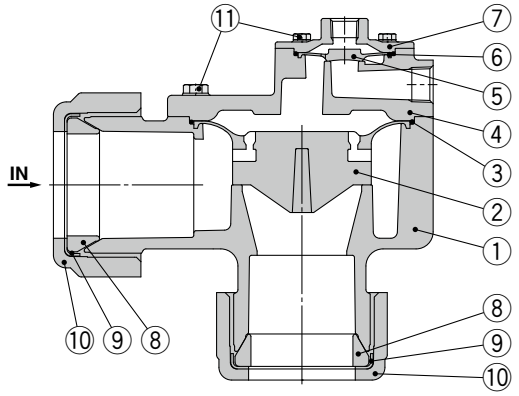


**Component Parts**

| No. | Description | Material |
|---|---|---|
| 1 | **Body** | ADC |
| 2 | **Main valve** | Resin |
| 3 | **O-ring** | NBR |
| 4 | **Bonnet** | ADC |
| 5 | **Sub-valve** | Resin |
| 6 | **O-ring** | NBR |
| 7 | **Bonnet** | ADC |
| 8 | **Seal** | NBR |
| 9 | **Washer** | Fe (Chromating) |
| 10 | **Compression nut** | ADC |
| 11 | **Hexagon bolt** | Stainless steel |

### JSXFAF/Direct Piping Type

#### Port sizes 06, 10

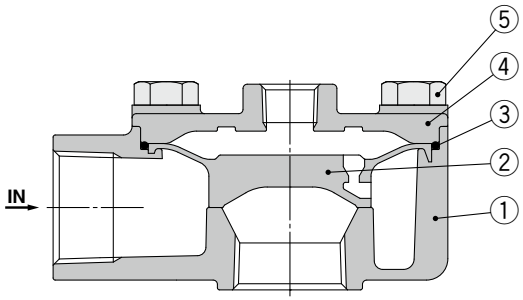


**Component Parts**

| No. | Description | Material |
|---|---|---|
| 1 | **Body** | ADC |
| 2 | **Main valve** | Resin |
| 3 | **O-ring** | NBR |
| 4 | **Bonnet** | ADC |
| 5 | **Hexagon bolt** | Stainless steel |

#### Port size 14

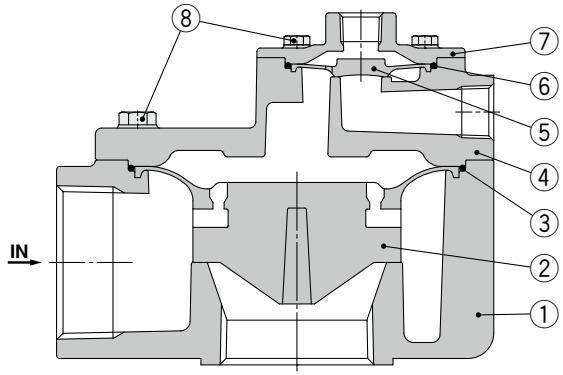


**Component Parts**

| No. | Description | Material |
|---|---|---|
| 1 | **Body** | ADC |
| 2 | **Main valve** | Resin |
| 3 | **O-ring** | NBR |
| 4 | **Bonnet** | ADC |
| 5 | **Sub-valve** | Resin |
| 6 | **O-ring** | NBR |
| 7 | **Bonnet** | ADC |
| 8 | **Hexagon bolt** | Stainless steel |

## Construction

### JSXFAH/Immersion Type

#### Port sizes 06, 10

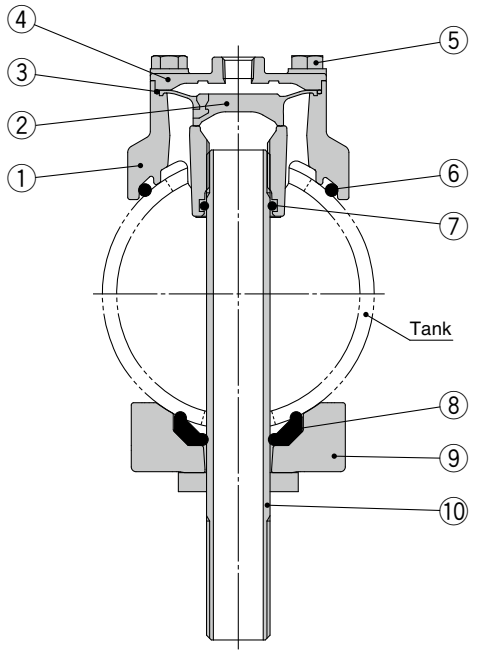


∗ The tank should be provided by the customer.

**Component Parts**

| No. | Description | Material |
|---|---|---|
| 1 | **Body** | ADC |
| 2 | **Main valve** | Resin |
| 3 | **O-ring** | NBR |
| 4 | **Bonnet** | ADC |
| 5 | **Hexagon bolt** | Stainless steel |
| 6 | **O-ring** | NBR |
| 7 | **O-ring** | NBR |
| 8 | **Gasket** | NBR |
| 9 | **Bottom support** | ADC |
| 10 | **Outlet pipe assembly** | STKM + SS400 |

#### Port sizes 14, 20

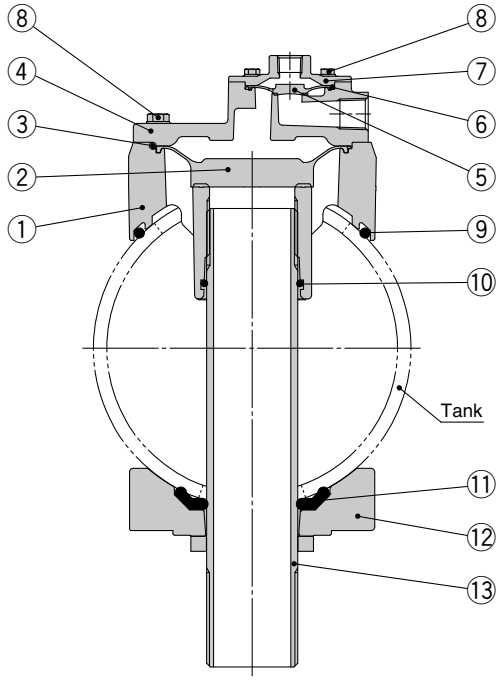


∗ The tank should be provided by the customer.

**Component Parts**

| No. | Description | Material |
|---|---|---|
| 1 | **Body** | ADC |
| 2 | **Main valve** | Resin |
| 3 | **O-ring** | NBR |
| 4 | **Bonnet** | ADC |
| 5 | **Sub-valve** | Resin |
| 6 | **O-ring** | NBR |
| 7 | **Bonnet** | ADC |
| 8 | **Hexagon bolt** | Stainless steel |
| 9 | **O-ring** | NBR |
| 10 | **O-ring** | NBR |
| 11 | **Gasket** | NBR |
| 12 | **Bottom support** | ADC |
| 13 | **Outlet pipe assembly** | STKM + SS400 |

## Dimensions: JSXFAE/Compression Fitting Type

### Port sizes 06, 10

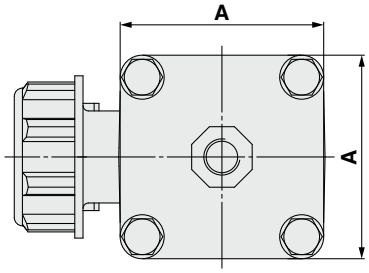



Port size 06


Port size 10

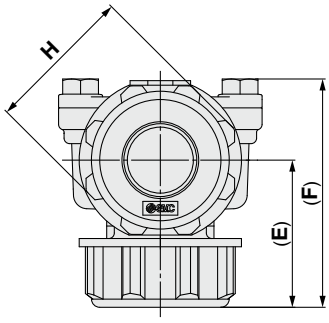


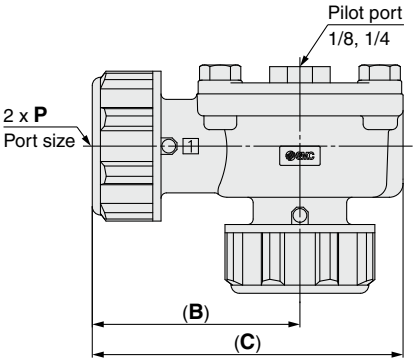


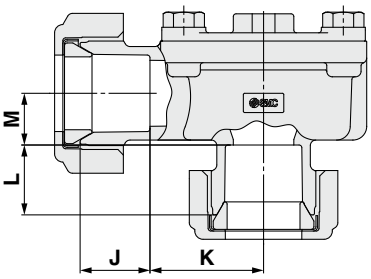


### Port size 14

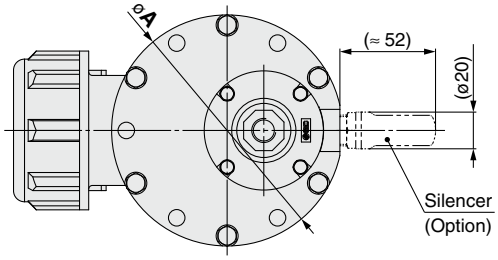



Port size 14

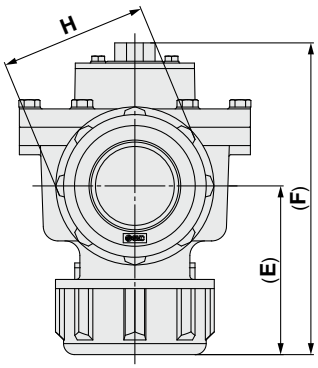


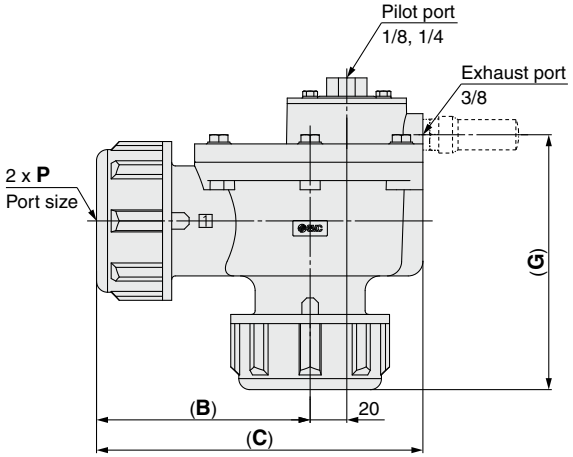


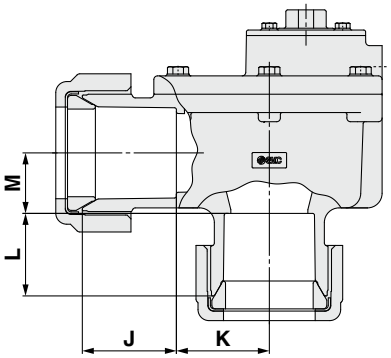


### Dimensions

[mm]

| Model | Port size P | A | (B) | (C) | (E) | (F) | (G) | H | J | K | L | M |
|---|---|---|---|---|---|---|---|---|---|---|---|---|
| **JSXFAE-06** | 3/4 | 74 | 76 | 113 | 54 | 83 | — | 54 | 25.4 | 41.3 | 25.4 | 18.8 |
| **JSXFAE-10** | 1 | 94 | 90 | 137 | 82 | 120 | — | 65 | 33.3 | 44.4 | 38.1 | 31.6 |
| **JSXFAE-14** | 1 1/2 | 126 | 117 | 178 | 92 | 170 | 139 | 80 | 51.3 | 50.7 | 45 | 33 |

Dimension in ( ) shows the dimension after tightening.

## Dimensions: JSXFAF/Direct Piping Type

### Port sizes 06, 10

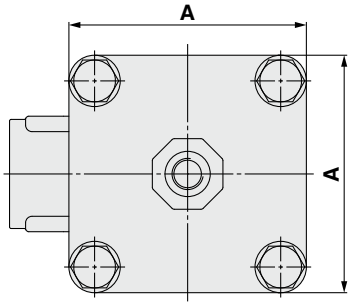



Port size 06


Port size 10

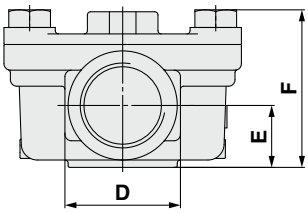


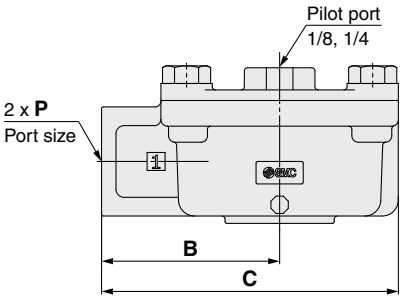


### Port size 14

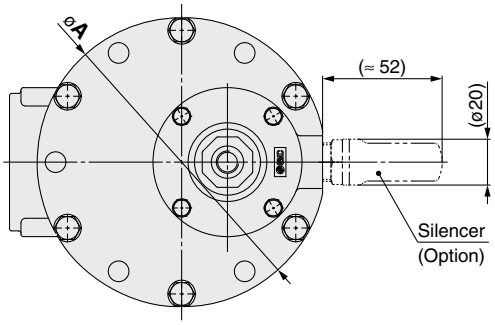



Port size 14

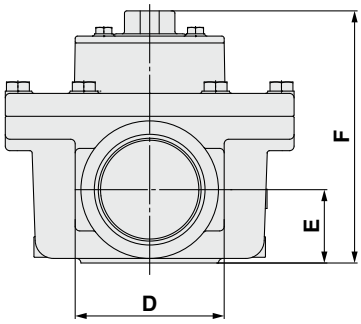


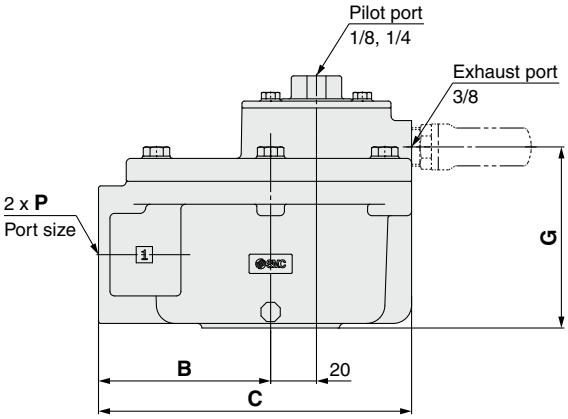


### Dimensions

[mm]

| Model | Port size P | A | B | C | D | E | F | G |
|---|---|---|---|---|---|---|---|---|
| **JSXFAF-06** | 3/4 | 74 | 55.5 | 92.5 | 36 | 19.3 | 48.8 | — |
| **JSXFAF-10** | 1 | 94 | 63.5 | 110.5 | 44 | 22.2 | 60.2 | — |
| **JSXFAF-14** | 1 1/2 | 126 | 75.1 | 136.6 | 65 | 32 | 110 | 79 |

## Dimensions: JSXFAH/Immersion Type

### Port size 06

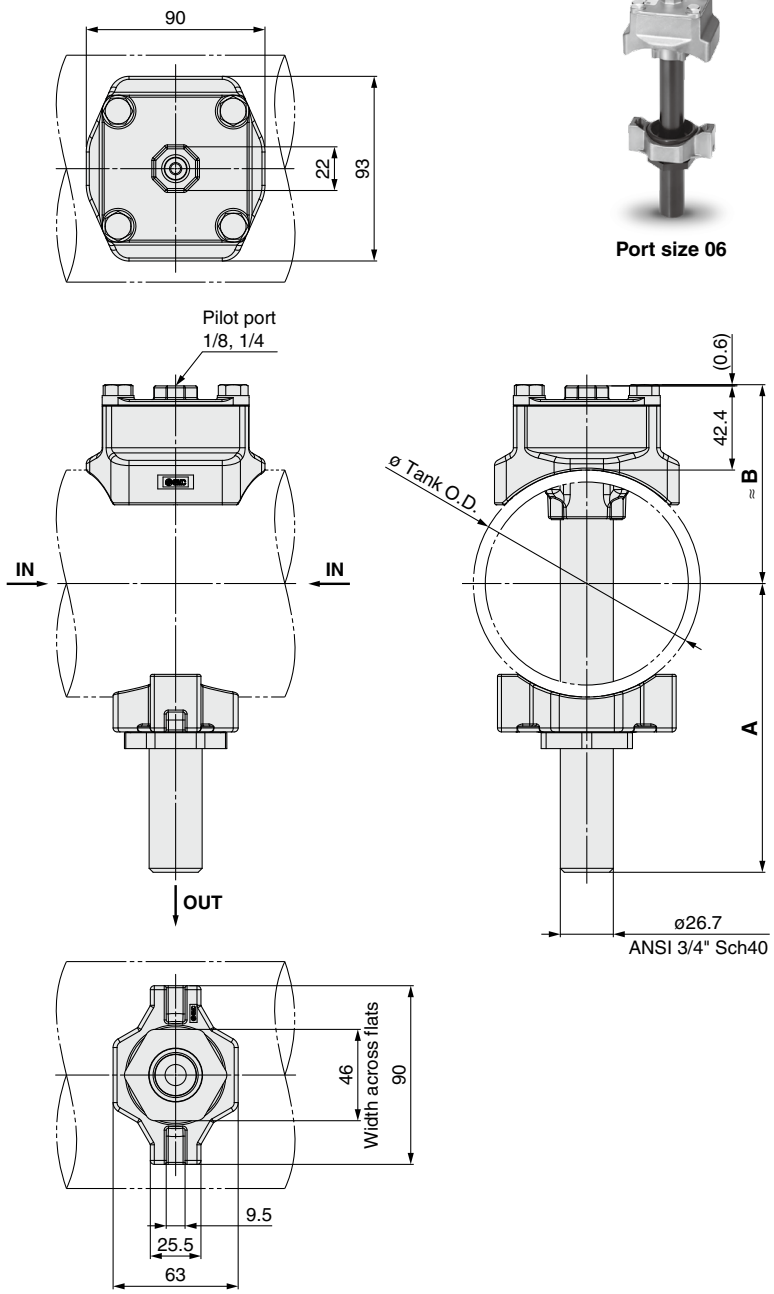


Port size 06

### Recommended Tank Dimensions

∗ The tank should be provided by the customer.

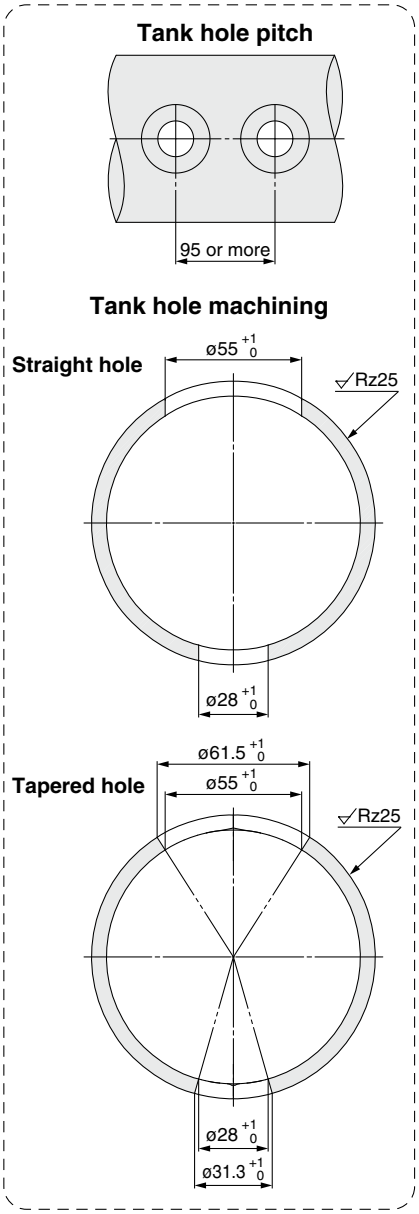


### Dimensions

| Tank size | Tank O.D. ø | B | OUT port piping configuration | | | | | | | | | | | |
|---|---|---|---|---|---|---|---|---|---|---|---|---|---|---|
| | | | 1 | | | 2 | | | 3 | | | 4 | | |
| | | | A | D | E | A | D | E | A | D | E | A | D | E |
| 4 inch (ANSI 4") | 114.3 $^{+1.6}_{-0.8}$ | 100 | 146 ±5 | — | 62 | 164 ±5 | — | 80 | 146 ±5 | 50 | 62 | 164 ±5 | 70 | 80 |
| 5 inch (ANSI 5") | 141.3 $^{+1.6}_{-0.8}$ | 114 | 153 ±5 | | 56 | 173 ±5 | | 76 | 153 ±5 | 50 | 56 | 173 ±5 | 70 | 76 |

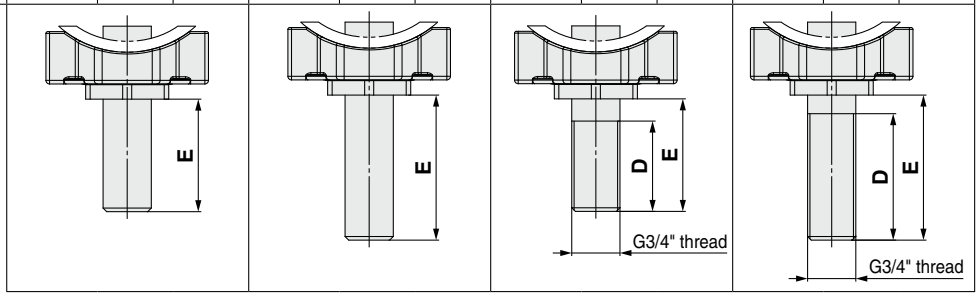

## Dimensions: JSXFAH/Immersion Type

### Port size 10

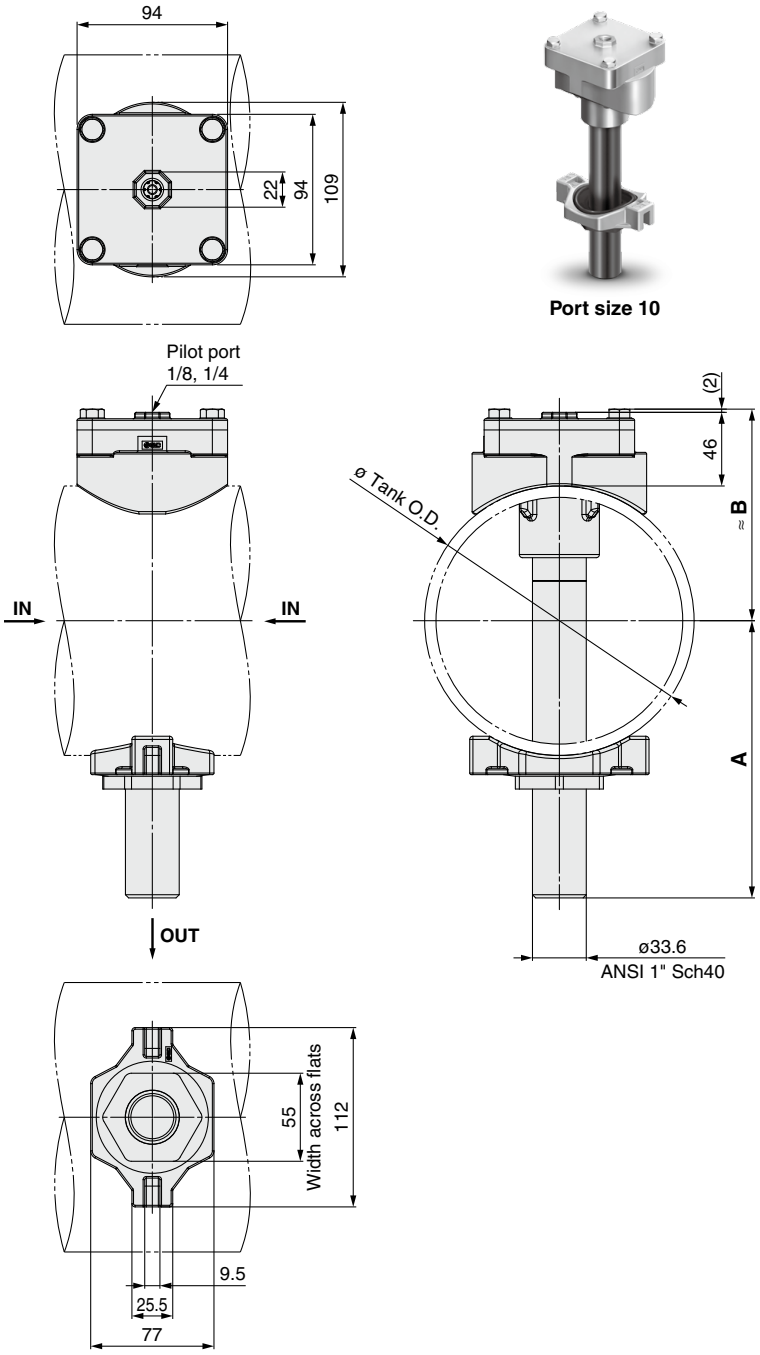




Port size 10

### Recommended Tank Dimensions

∗ The tank should be provided by the customer.

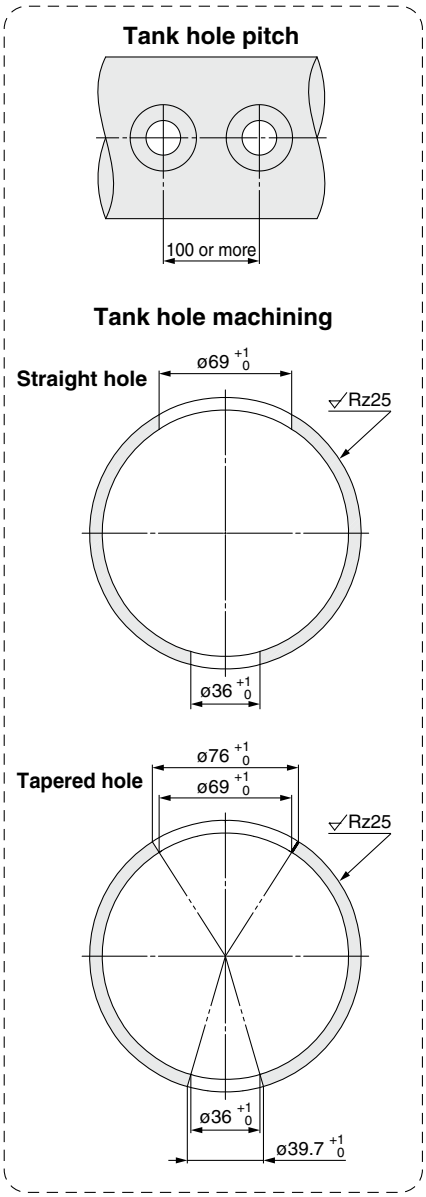


### Dimensions

| Tank size | Tank O.D. ø | B | OUT port piping configuration 1 A | 1 D | 1 E | 2 A | 2 D | 2 E | 3 A | 3 D | 3 E | 4 A | 4 D | 4 E |
|---|---|---|---|---|---|---|---|---|---|---|---|---|---|---|
| 5 inch (ANSI 5") | 141.3 $^{+1.6}_{-0.8}$ | 119 | 153 ±5 | — | 61 | 173 ±5 | — | 81 | 153 ±5 | 50 | 61 | 173 ±5 | 70 | 81 |
| 6 inch (ANSI 6") | 168.3 $^{+1.6}_{-0.8}$ | 132 | 173 ±5 | | 68 | 213 ±5 | | 108 | 173 ±5 | 50 | 68 | 213 ±5 | 90 | 108 |

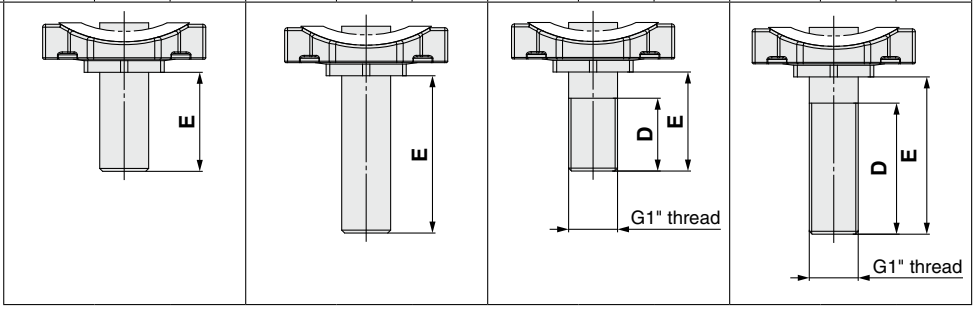

## Dimensions: JSXFAH/Immersion Type

### Port size 14

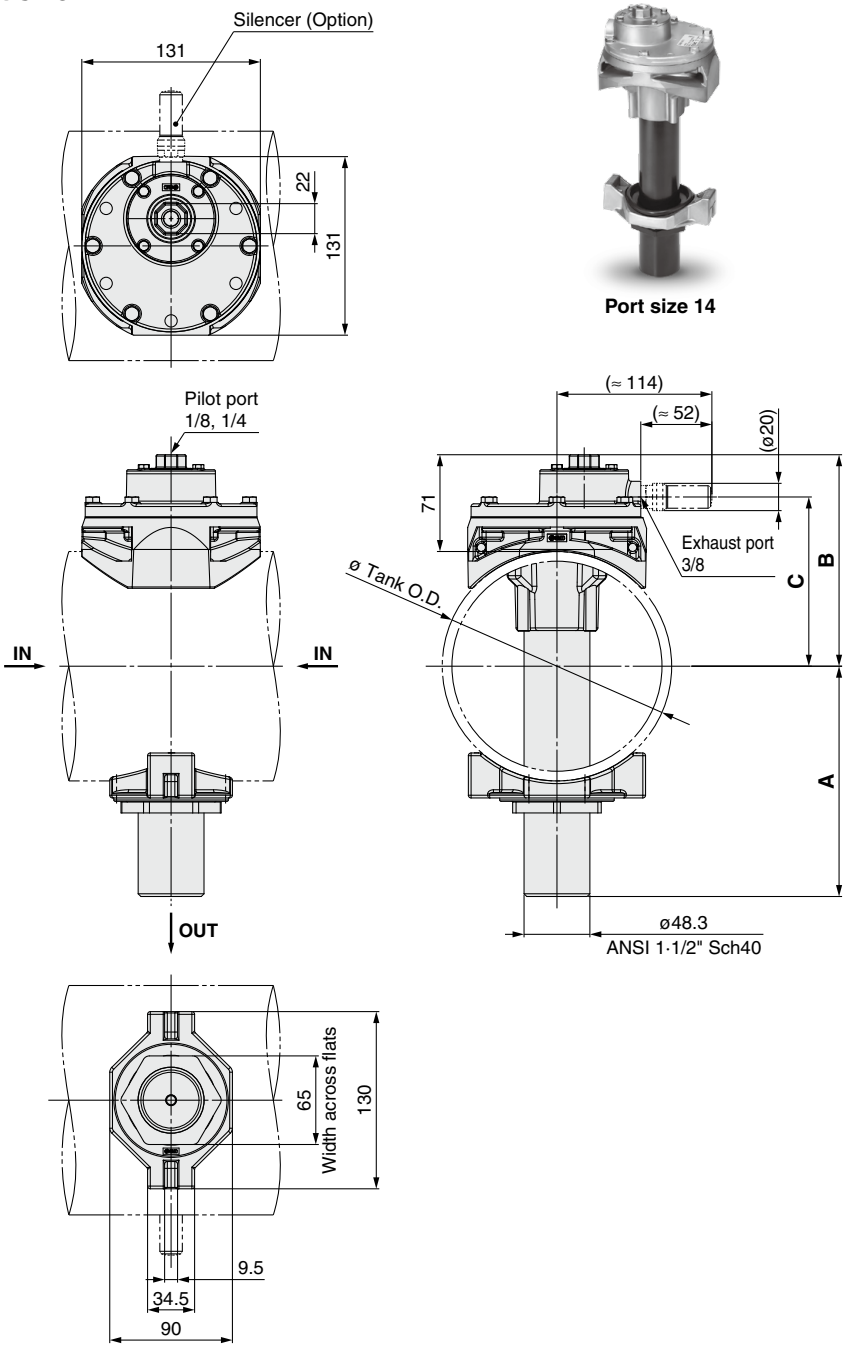




Port size 14

### Recommended Tank Dimensions

∗ The tank should be provided by the customer.

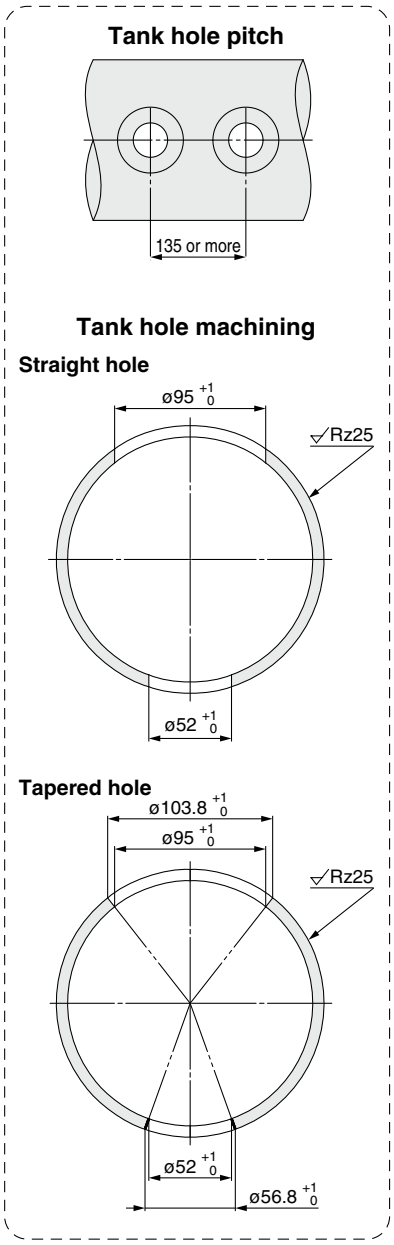


### Dimensions

| Tank size | Tank O.D. ø | B | C | OUT port piping configuration 1 A | 1 D | 1 E | 2 A | 2 D | 2 E | 3 A | 3 D | 3 E | 4 A | 4 D | 4 E |
|---|---|---|---|---|---|---|---|---|---|---|---|---|---|---|---|
| 6 inch (ANSI 6") | 168.3 $^{+1.6}_{-0.8}$ | 155 | 124 | 169 ±5 | — | 61 | 209 ±5 | — | 101 | 169 ±5 | 50 | 61 | 209 ±5 | 90 | 101 |
| 8 inch (ANSI 8") | 219.1 $^{+1.6}_{-0.8}$ | 181 | 150 | 198 ±5 | | 65 | 258 ±5 | | 125 | 198 ±5 | 50 | 65 | 258 ±5 | 110 | 125 |

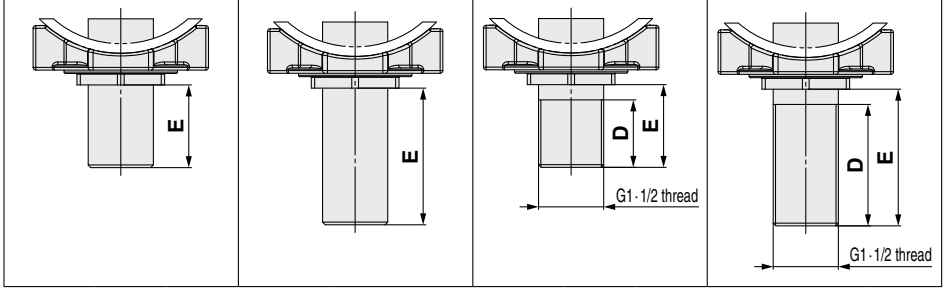

## Dimensions: JSXFAH/Immersion Type

### Port size 20

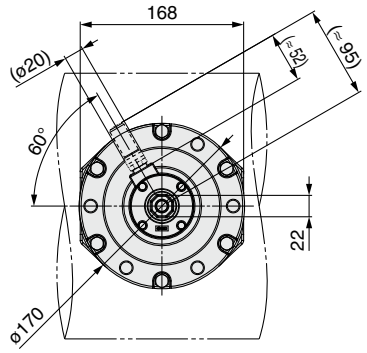


Port size 20

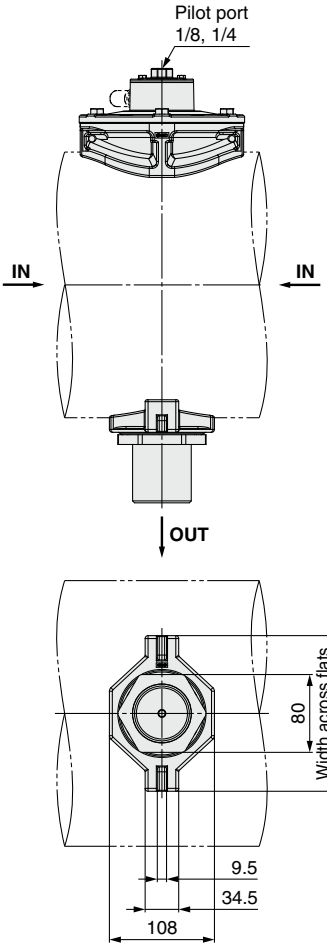


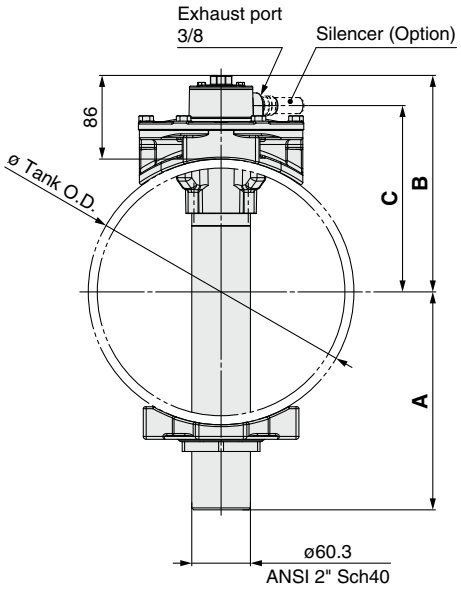


### Recommended Tank Dimensions

∗ The tank should be provided by the customer.

**Tank hole pitch**

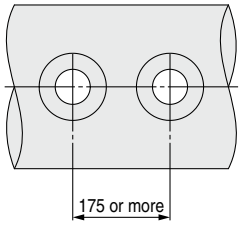


**Tank hole machining**

**Straight hole**

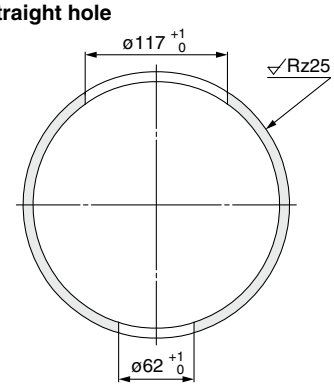


**Tapered hole**

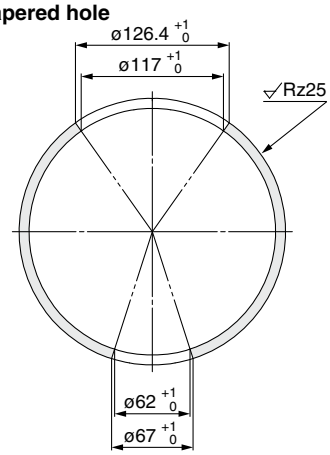


### Dimensions

| Tank size | Tank O.D. ø | B | C | OUT port piping configuration | | | | | | | | | | | |
|---|---|---|---|---|---|---|---|---|---|---|---|---|---|---|---|
| | | | | 1 | | | 2 | | | 3 | | | 4 | | |
| | | | | A | D | E | A | D | E | A | D | E | A | D | E |
| 8 inch (ANSI 8") | 219.1 $^{+1.6}_{-0.8}$ | 196 | 165 | 197 ±5 | — | 60 | 257 ±5 | — | 120 | 197 ±5 | 50 | 60 | 257 ±5 | 110 | 120 |
| 10 inch (ANSI 10") | 273.1 $^{+2.4}_{-0.8}$ | 223 | 192 | 224 ±5 | | 60 | 284 ±5 | | 120 | 224 ±5 | 50 | 60 | 284 ±5 | 110 | 120 |

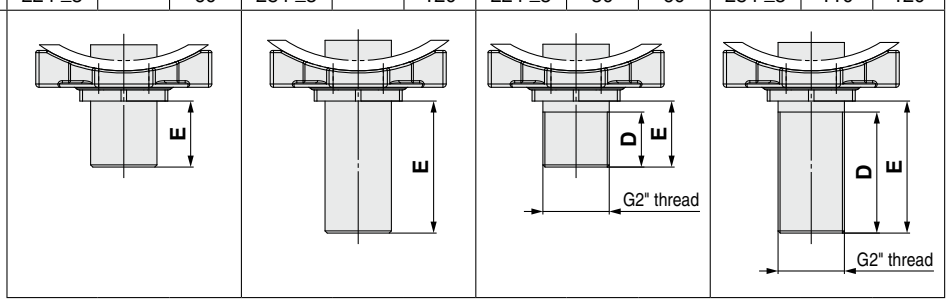

## Replacement Parts (Air Operated Type/JSXFA)

| Port size | Model | Replacement part number | | |
|---|---|---|---|---|
| | | Main valve assembly (Main valve + O-ring) | Sub-valve assembly (Sub-valve + O-ring) | Silencer |
| 06 | **JSXFA(E, F, H)□-06□-B-□** | JSXF-06B-KT | — | — |
| | **JSXFA(E, F, H)□-06□-B-□A** | JSXF-06B-A-KT | — | — |
| 10 | **JSXFA(E, F, H)□-10□-B-□** | JSXF-10B-KT | — | — |
| | **JSXFA(E, F, H)□-10□-B-□A** | JSXF-10B-A-KT | — | — |
| 14 | **JSXFA(E, F)□-14□-B-(S)□** | JSXF-14B-KT | JSXF-14B-KT2 | Rc, G thread: AN30-03<br>NPT thread: AN30-N03 |
| | **JSXFAH□-14□-B-(S)□** | JSXF-14B-1-KT | | |
| 20 | **JSXFAH□-20□-B-(S)□** | JSXF-20B-KT | JSXF-14B-KT2 | |

### Disassembly/Assembly Procedure

## ⚠Caution

**1. Before disassembly, be sure to turn OFF the power supply and pressure supply, and then release the residual pressure.**

### Disassembly

1) Loosen the hexagon bolts, and remove the bonnet, O-ring, and the main valve (sub-valve).

### Assembly

1) Attach the main valve (sub-valve) to the body. The main valve (sub-valve) has a predetermined mounting direction.
**Assemble the valve referring to Fig. 1.**
If the valve is assembled incorrectly, it can cause a malfunction.
2) Mount the O-ring to the body groove. (See Fig. 2.)
After mounting the O-ring, check to make sure that the O-ring is fitted properly into the groove. If it is not in the groove, external leakage and/or operation failure may occur.
3) Attach the bonnet to the body.
4) Tighten the hexagon bolts diagonally.
(See Table 1 for the tightening torque.)

**Table 1 Proper Tightening Torque** [N·m]

| | | | |
|---|---|---|---|
| JSXFA□-06□ | | M8 | 12.5 to 13.8 |
| JSXFA□-10□ | | M8 | 12.5 to 13.8 |
| JSXFA□-14□ | Main valve | M6 | 5.2 to 5.7 |
| | Sub-valve | M4 | 1.5 to 1.7 |
| JSXFA□-20□ | Main valve | M8 | 12.5 to 13.8 |
| | Sub-valve | M4 | 1.5 to 1.7 |

**Port sizes 06, 10**

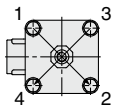


**Port sizes 14, 20**

**Main valve**

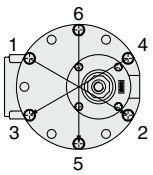


**Sub-valve**

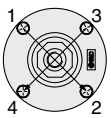


**Port sizes 06, 10**

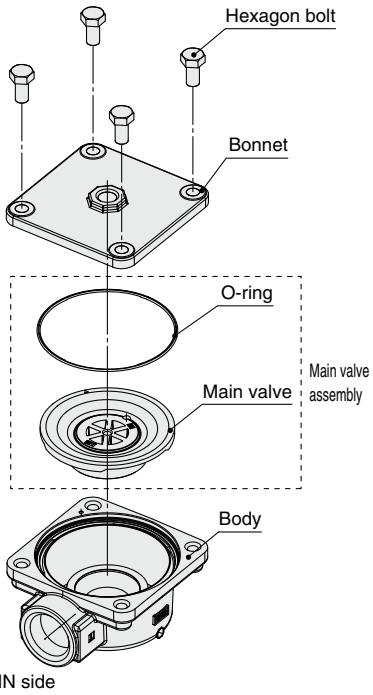


**Port sizes 14, 20**

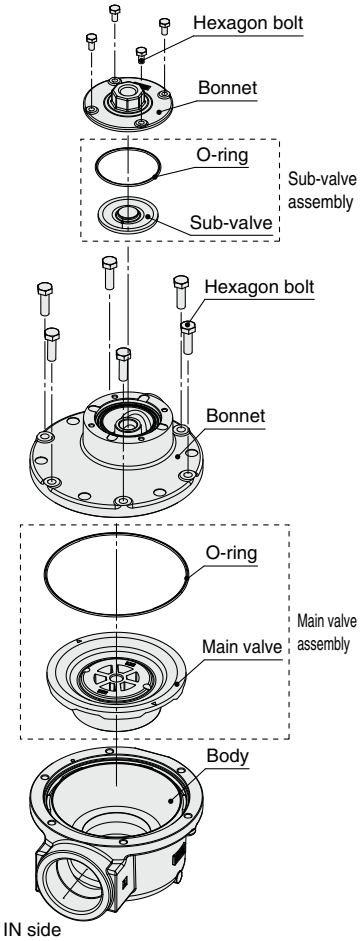


**Fig. 2 O-ring position**

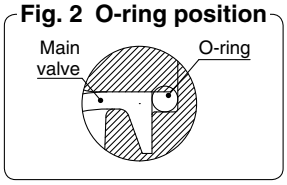


**Fig. 1 Valve position**

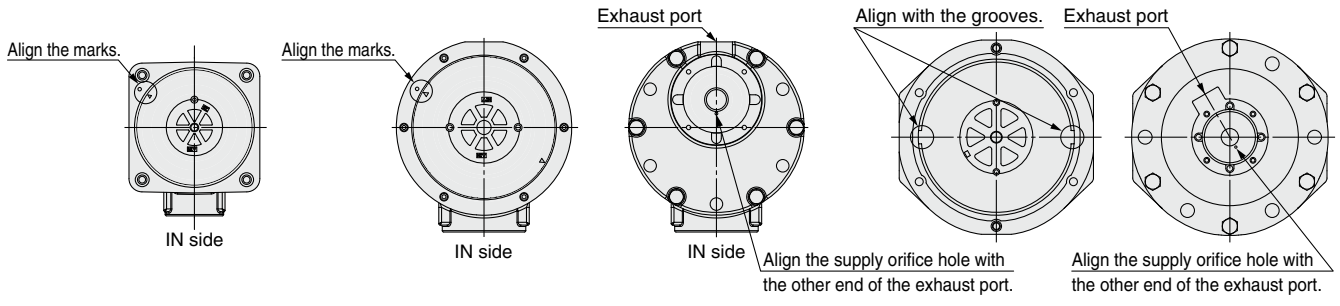

# *JSXF/JSXFA Series*
# Working Principle

## Port Sizes 06, 10

**De-energized**

The air enters from the IN side goes through the supply orifice of the main valve to fill the pressure action chamber. The main valve is closed by the pressure built in the pressure action chamber.

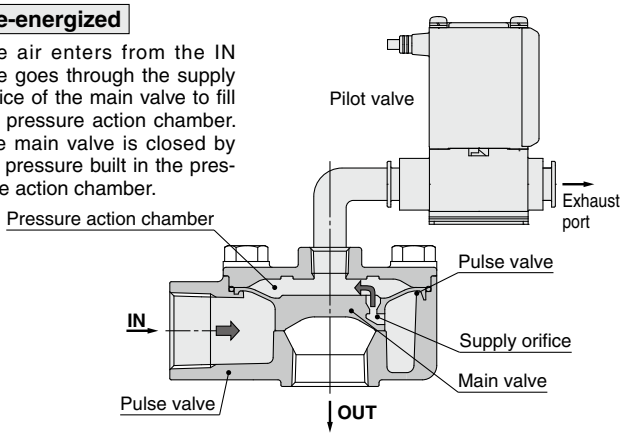


**Right after energized**

When the pilot valve is energized, the armature opens, and the air filling the pressure action chamber is released to the atmosphere through the pilot valve.

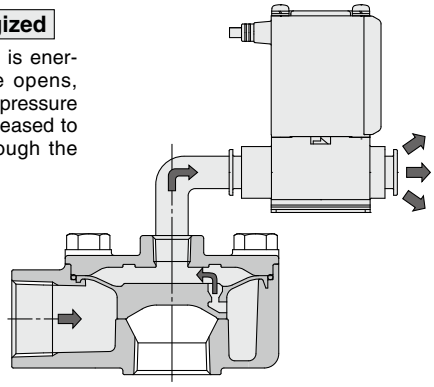

**Energized (Main valve open)**

Due to the release of air from the pilot valve to atmosphere, the pressure in the pressure action chamber decreases (force pushing the main valve down < force pushing the main valve up), opening the main valve. Because of this, the air flows to the OUT side.

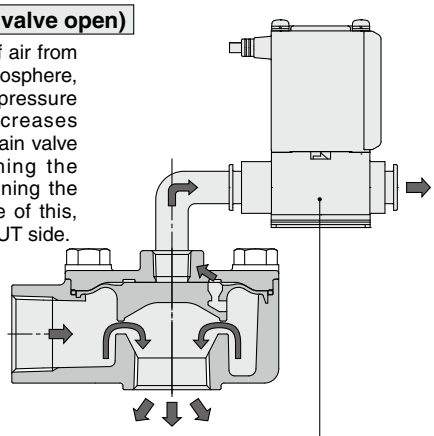

⚠Caution p. 15 Pilot Valve Selection

## Port Sizes 14, 20

**De-energized**

The air enters from the IN side goes through the supply orifice of the main valve and sub-valve to fill the pressure action chamber. The main valve and sub-valve are closed by the pressure built in the pressure action chamber.

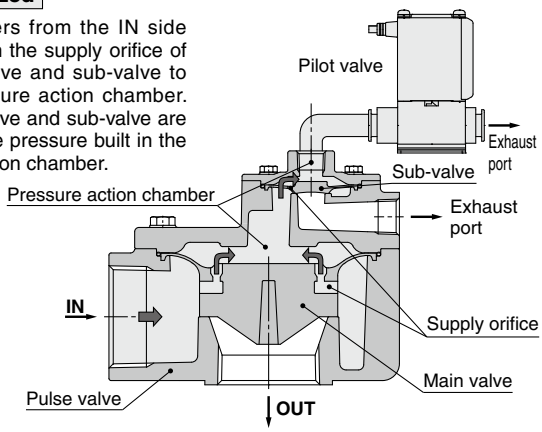


**Right after energized**

When the pilot valve is energized, the armature opens, and the air filling the pressure action chamber ① is released to the atmosphere through the pilot valve.

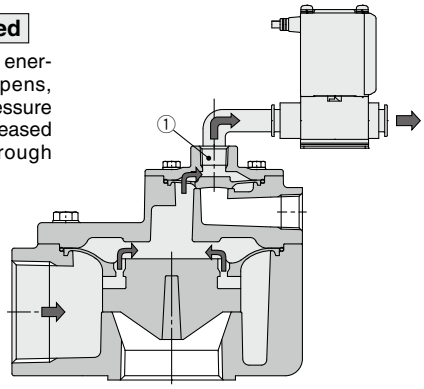


**Energized (Sub-valve open)**

Due to the release of air from the pilot valve to atmosphere, the pressure in the sub-valve pressure action chamber ① decreases (force pushing the sub-valve down < force pushing the sub-valve up), opening the sub-valve. Because of this, the air filling the pressure action chamber ② is released to the atmosphere from the exhaust port.

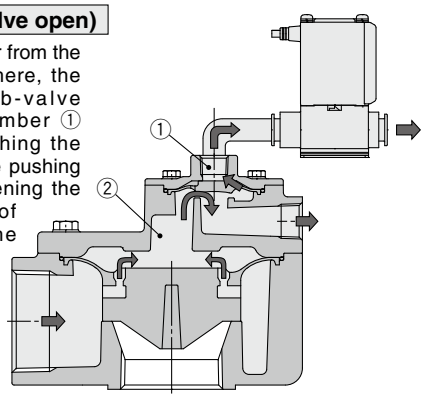


**Energized (Main valve open)**

Due to the release of air from the pressure action chamber ②, the pressure in the pressure action chamber ② decreases (force pushing the main valve down < force pushing the main valve up), opening the main valve. Because of this, the air flows to the OUT side of the pulse valve.

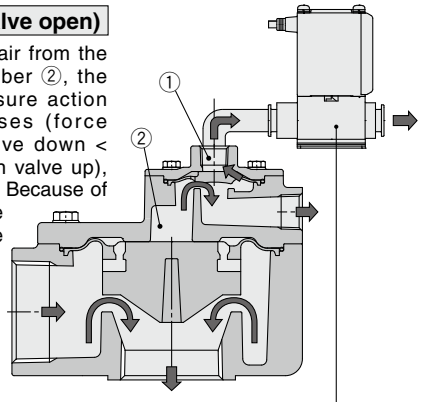


⚠Caution p. 15 Pilot Valve Selection

∗ The figure shows the JSXFAF.

# Immersion Type *JSXF/JSXFA Series*
# Made to Order

Solenoid valve type only
For details, refer to ❻ below.

## 1 Tank Hole Diameter: ø76

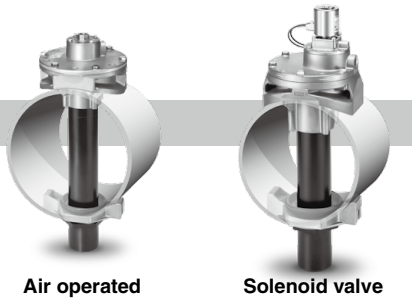

Air operated type | Solenoid valve type

## How to Order

**Solenoid Valve Type** JSXFH 6C – 14 N 1 – 5 G B – S

**Air Operated Type** JSXFAH 6C – 14 N 1 – B – S 1

❶ ❷ ❸ ❹ ❺ ❻ ❼ ❽ ❾

### ❶ Tank size

| | |
|---|---|
| 6C | 6 inch<br>Tank hole dia. ø76 |

### ❷ Port size

| | |
|---|---|
| 14 | 1 1/2 (40A) |

### ❸ Thread type

| | |
|---|---|
| N | NPT |

### ❹ OUT port piping configuration

| | | |
|---|---|---|
| 1 | Short | None |
| 2 | Long | |
| 3 | Short | G thread |
| 4 | Long | |

### ❺ Rated voltage

**AC**

| Symbol | Rated voltage |
|---|---|
| 1 | 100 VAC |
| 2 | 200 VAC |
| 3 | 120 VAC (110 VAC) |
| 4 | 220 VAC |
| 7 | 240 VAC |
| J | 230 VAC |

**DC**

| Symbol | Rated voltage |
|---|---|
| 5 | 24 VDC |

### ❻ Electrical entry

| Symbol | Electrical entry | | CE/UKCA-compliant |
|---|---|---|---|
| G | Grommet*1 |  | 24 VDC |
| GS | Grommet with PCB (With surge voltage suppressor) |  | 100 VAC<br>24 VDC |
| CS | Conduit (With surge voltage suppressor) |  | All voltages |
| DS | DIN terminal (With surge voltage suppressor) | 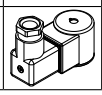 | All voltages |
| DZ | DIN terminal with light (With surge voltage suppressor) | 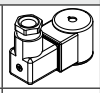 | All voltages |
| DN | DIN terminal without connector (With surge voltage suppressor) |  | All voltages |
| WN | M12 connector*2 (With surge voltage suppressor) |  | All voltages |

*1 Only 24 VDC can be selected for the rated voltage.
*2 A cable for the M12 connector is not included with the product. Refer to the "Option" on page 14 to order it separately.

### ❼ Fluid and ambient temperatures

| | |
|---|---|
| B | –40 to 60°C |

### ❽ Silencer

| | |
|---|---|
| Nil | Without |
| S | With |

### ❾ Pilot port size

| | |
|---|---|
| Nil | 1/4 |
| 1 | 1/8 |

## Recommended Tank Dimensions

* The tank should be provided by the customer.

**Tank hole pitch**

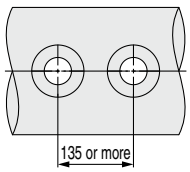


**Tank hole machining**

**Straight hole**

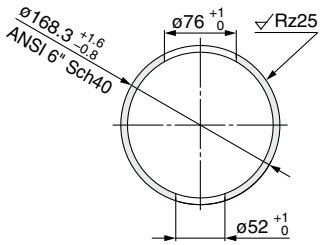


**Tapered hole**

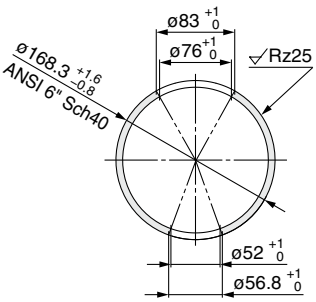


**The specifications and replacement parts are the same as those of the standard model.**
Refer to pages 6 and 13 for the solenoid valve type, and refer to pages 16 and 25 for the air operated type. Add 140 g to the weight of each.

## Dimensions

### Air Operated Type

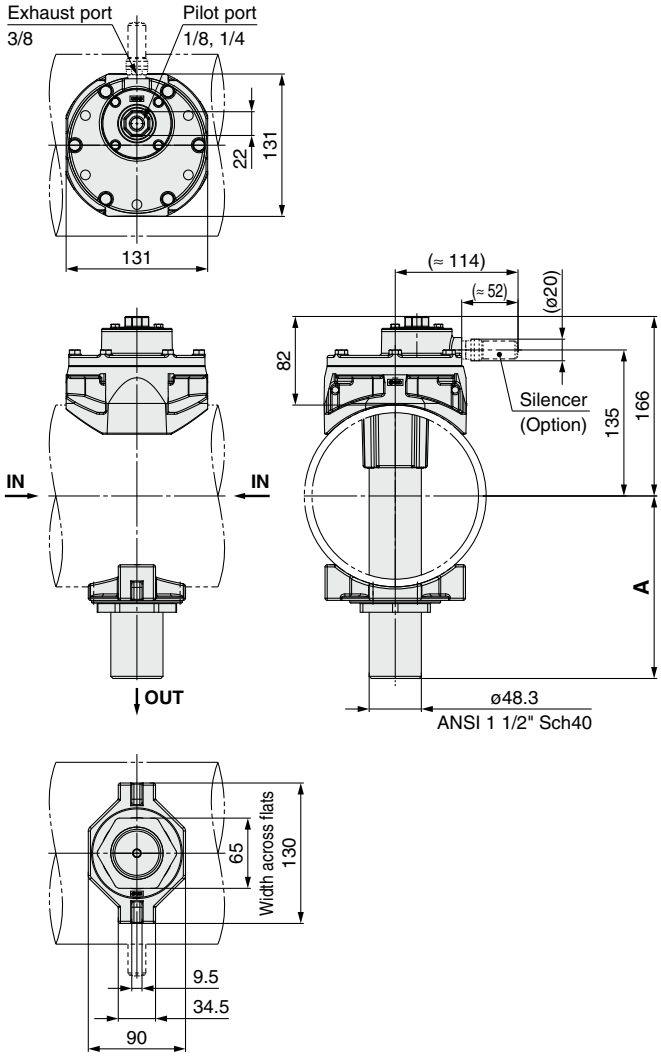


### Solenoid Valve Type

Dimensions other than those below are the same as those of the air operated type.

#### G: Grommet

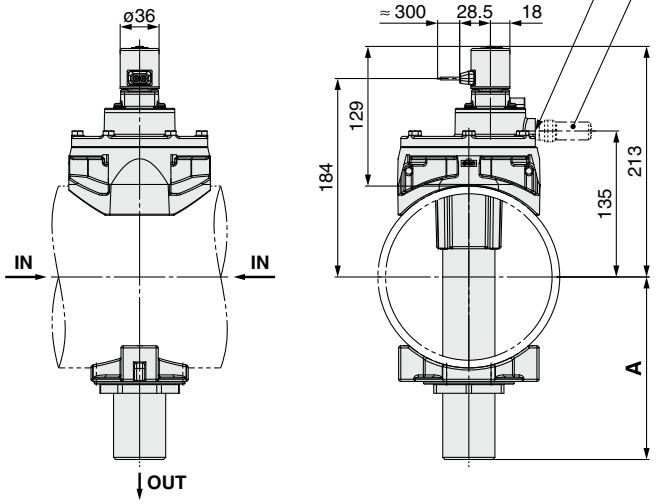


#### GS: Grommet with PCB

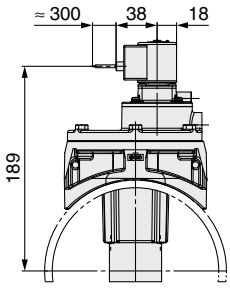


#### CS: Conduit

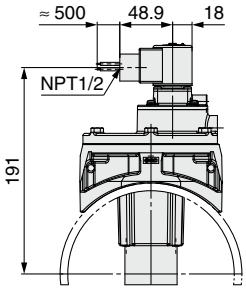


#### DS: DIN terminal
#### DZ: DIN terminal with light

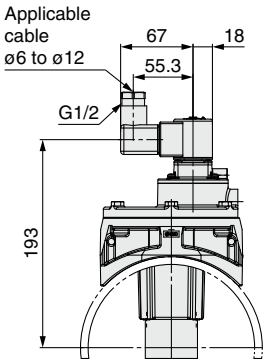


#### DN: Without DIN connector

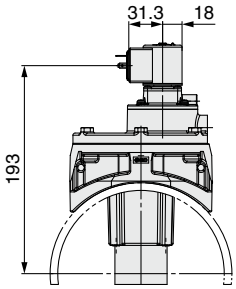


#### WN: M12 connector

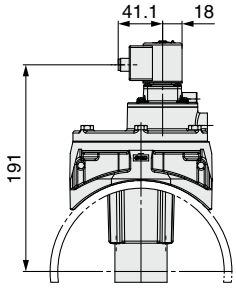


| Dimensions | OUT port piping configuration | | | |
|---|---|---|---|---|
| | 1 | 2 | 3 | 4 |
| A | 169 ±5 | 209 ±5 | 169 ±5 | 209 ±5 |
| | 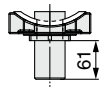  | 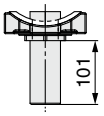  | 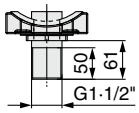  | 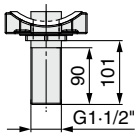  |

# ATEX Compliant Pulse Valve Valve for Dust Collector

## Air Operated Type

# 55-JSXFA Series

RoHS

CE Ex II 2 G Ex h IIB T6 Gb
II 2 D Ex h IIIB T72°C Db
–40°C ≤ Ta ≤ +60°C

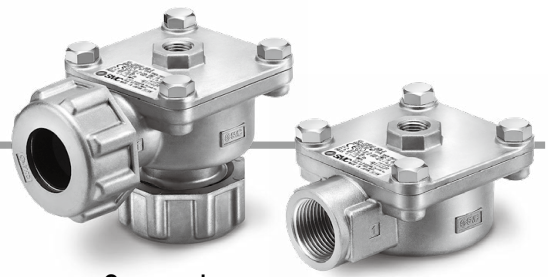

Compression fitting type

Direct piping type

## How to Order

**55 – JSXFA E – 06 R – B – □ 1**

- 55: ATEX category 2
- ❶ E
- ❷ 06
- ❸ R
- ❹ B
- ❺ □
- ❻ 1

### ❶ Piping

| | |
|---|---|
| E | Compression fitting type*1 |
| F | Direct piping type |

*1 Seals and washers are included.

### ❷ IN/OUT port size

| | |
|---|---|
| 06 | 3/4 (20A) |
| 10 | 1 (25A) |
| 14 | 1 1/2 (40A) |

### ❸ Thread type

| | |
|---|---|
| R | Rc |
| N | NPT |
| F | G |

### ❹ Fluid and ambient temperatures

| | |
|---|---|
| B | –40 to 60°C |

### ❺ With/without silencer

| | | Port size | | |
|---|---|---|---|---|
| | | 06 | 10 | 14 |
| Nil | Without | ● | ● | ● |
| S*2 | With | — | — | ● |

*2 Port size: 14 only
Select Nil for 06 and 10.

### ❻ Pilot port size

| | |
|---|---|
| Nil | 1/4 |
| 1 | 1/8 |

### Symbol

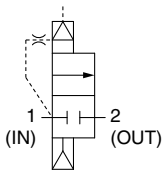


## ⚠ Caution

### Pilot Valve Selection

**For the pilot valve orifice diameter, ø5 mm or larger is recommended.**

When the pilot orifice diameter is ø3 mm or larger and less than ø5 mm, put "**A**" to the end of the product number for made-to-order. The product may not operate correctly if the pilot valve orifice diameter is inadequate. (Port size: 3/4, 1) Depending on the pilot piping port size*1 or length, the valve may not operate correctly.

*1 The I.D. of the pilot piping must be larger than the pilot valve orifice diameter to use. The max. pilot piping I.D. is 10 mm.

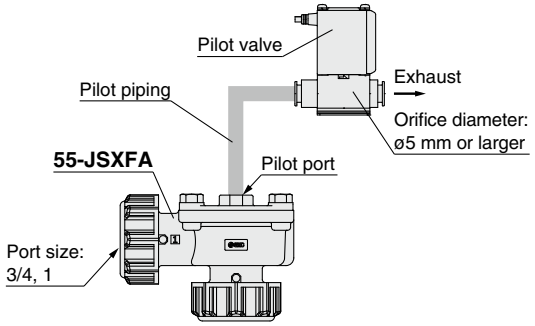


## Made to Order

**Pilot valve orifice diameter: Special specification**

| | | |
|---|---|---|
| A | For ø3 mm to ø5 mm | Port size: 06, 10 |

**55-JSXFA □-□□-B-□□A**

Enter the standard product number.

## Specifications

| Series | | 55-JSXFA | | |
|---|---|---|---|---|
| | | 06 | 10 | 14 |
| Orifice diameter [mm] | | ø32 | ø40 | ø50 |
| Port size | | 3/4 | 1 | 1 1/2 |
| Fluid | | Air | | |
| Min. operating pressure differential [MPa] | | 0.1 | | |
| Max. operating pressure differential [MPa] | | 0.9 | | |
| Max. system pressure [MPa] | | 0.9 | | |
| Fluid temperature [°C] | | –40*1 to 60 | | |
| Ambient temperature [°C] | | –40 to 60 | | |
| Weight [g] | Compression fitting type | 470 | 910 | 1850 |
| | Direct piping type | 290 | 500 | 1230 |

*1 No condensation

## Replacement Parts

| Size | Model | Replacement part number | | |
|---|---|---|---|---|
| | | Main valve assembly (Main valve + O-ring) | Sub-valve assembly (Sub-valve + O-ring) | Silencer |
| Port size: 06 | 55-JSXFA(E, F)-06□-B-□ | JSXF-06B-KT | — | — |
| | 55-JSXFA(E, F)-06□-B-□A | JSXF-06B-A-KT | — | — |
| Port size: 10 | 55-JSXFA(E, F)-10□-B-□ | JSXF-10B-KT | — | — |
| | 55-JSXFA(E, F)-10□-B-□A | JSXF-10B-A-KT | — | — |
| Port size: 14 | 55-JSXFA(E, F)-14□-B-□ | JSXF-14B-KT | JSXF-14B-KT2 | Rc, G thread: AN30-03<br>NPT thread : AN30-N03 |

# Dedicated Controller for Operation
# *VXFC* Series

Excludes the VXFC□A

## How to Order Controller

**VXFC 06 D**

**Number of output points**

| | |
|---|---|
| 06 | 6 output points |
| 10 | 10 output points |

**Voltage**

| | |
|---|---|
| D | 24 to 48 VDC |
| D-6 | 12 VDC |
| A*1 | 85 to 240 VAC |

*1 "A" is not a CE/UKCA marked product.

## Specifications

| Model | | VXFC$^{06}_{10}$A | VXFC$^{06}_{10}$D | VXFC$^{06}_{10}$D-6 |
|---|---|---|---|---|
| Input voltage | | 85 to 240 VAC | 24 to 48 VDC | 12 VDC |
| Output voltage | | Same as input voltage | | |
| Time setting | ON | 0.01 to 0.99 s | | |
| | OFF | 0 to 299 s | | |
| | Time accuracy | ±2% | | |
| Number of outputs | | 6 to 10 points | | |
| Operating ambient temperature | | 0 to 50°C (No condensation) | | |
| Operating ambient humidity | | 45 to 80% (No condensation) | | |
| Output current | | 0.5 A or less | 0.5 A or less | 0.5 A or less |
| Power supply fuse | | 3 A | 1 A | 1 A |

**[Application example]**

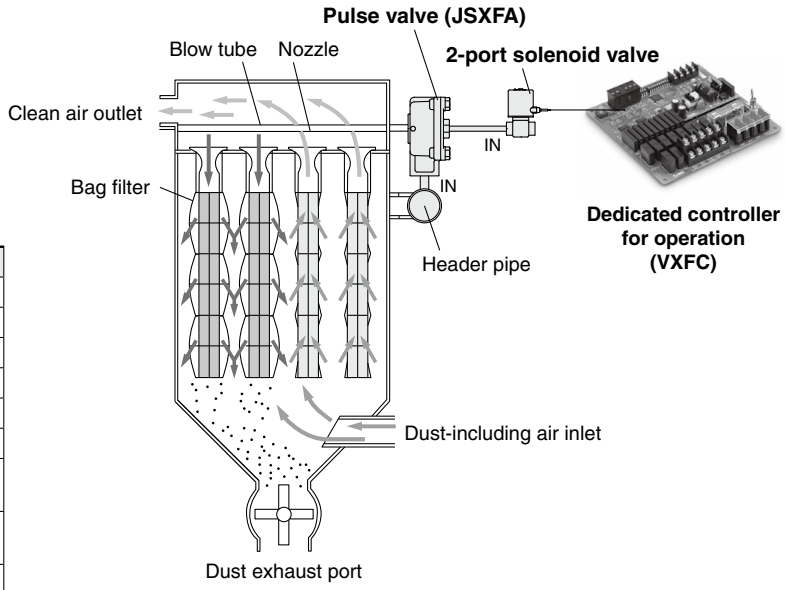


## Two-time Hitting Function

A two-time hitting function has been adopted to improve the bag filter dusting efficiency. Turn ON the DIP switch for two-time hitting (OFF for one-time hitting).
(Effective for up to the number of set channels)

### Operation sequence diagram

For
- 4 output points
- Two-time hitting only for CH2
- ON for 1 s
- OFF for 2 s

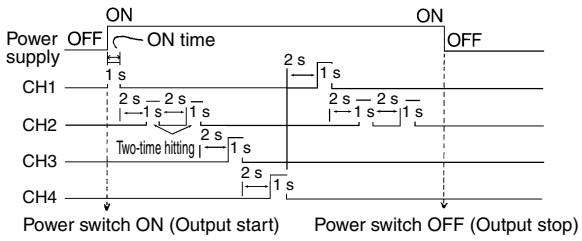


## Interrupt Operation Function

Interrupting an operation via an external switch is possible using input signals.

### Operation sequence diagram

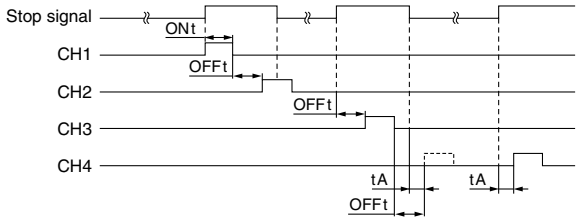


## Cascade Connection (Multiple-board connection)

VXFC10: One board only allows 10 output points max., but the points can be increased to 20 or 30 output points by connecting cascades.

### Connection

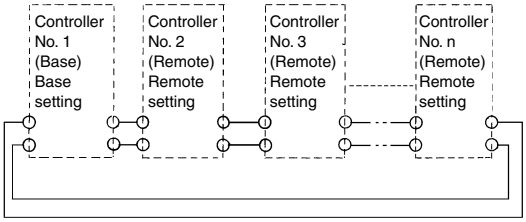


### Operation sequence diagram

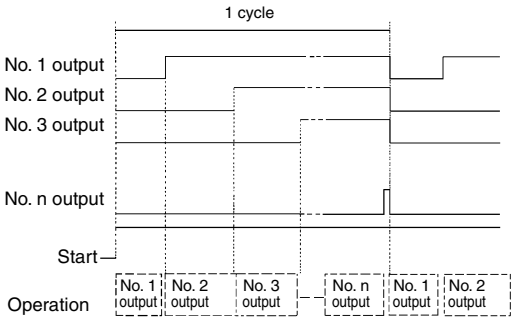

## Dimensions

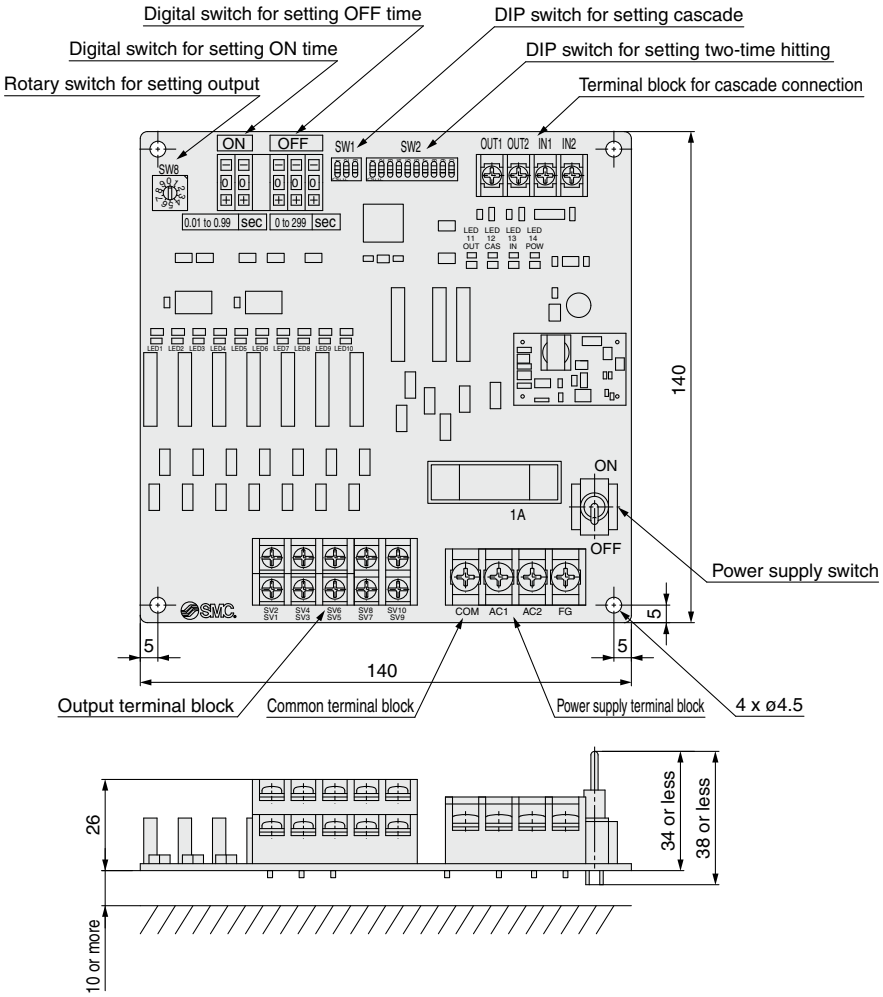
Digital switch for setting OFF time
Digital switch for setting ON time
Rotary switch for setting output
DIP switch for setting cascade
DIP switch for setting two-time hitting
Terminal block for cascade connection
ON
OFF
SW1
SW2
OUT1 OUT2 IN1 IN2
SW8
0.01 to 0.99 sec
0 to 299 sec
LED 11 OUT
LED 12 CAS
LED 13 IN
LED 14 POW
LED1 LED2 LED3 LED4 LED5 LED6 LED7 LED8 LED9 LED10
140
ON
1A
OFF
Power supply switch
SV2 SV1
SV4 SV3
SV6 SV5
SV8 SV7
SV10 SV9
COM AC1 AC2 FG
5
5
5
140
Output terminal block
Common terminal block
Power supply terminal block
4 x ø4.5
26
10 or more
34 or less
38 or less

# Glossary of Terms

## Pressure Terminology

**1. Max. operating pressure differential**

The max. pressure differential (the difference between the inlet and outlet pressure) which is allowed for operation. When the outlet pressure is 0 MPa, this becomes the max. operating pressure.

**2. Min. operating pressure differential**

The min. pressure differential (the difference between the inlet pressure and outlet pressure) required to keep the main valve fully open.

**3. Max. system pressure**

The max. pressure that can be applied inside the pipelines (line pressure).

[The pressure differential of the solenoid valve portion must not exceed the max. operating pressure differential.]

**4. Withstand pressure**

The pressure in which the valve must be withstood without a drop in performance after holding for one minute under prescribed pressure and returning to the operating pressure range. (value under the prescribed conditions)

## Electrical Terminology

**1. Apparent power (VA)**

Volt-ampere is the product of voltage (V) and current (A).

Power consumption (W): For AC, $W = V \cdot A \cdot \cos\theta$.

For DC, $W = V \cdot A$.

∗ $\cos\theta$ shows power factor. $\cos\theta \approx 0.9$

**2. Surge voltage**

A high voltage which is momentarily generated by shutting off the power in the shut-off area.

**3. Degrees of protection**

A degree defined in the "JIS C 0920: Waterproof test of electric machinery/appliance and the degree of protection against the intrusion of solid foreign objects."

**IP – □ □**

**First digit** ● ● **Second digit**

● **First Digit:**
**Degree of protection against solid foreign objects**

| | |
|---|---|
| **0** | Not protected |
| **1** | Protected against solid foreign objects of 50 mmø and larger |
| **2** | Protected against solid foreign objects of 12 mmø and larger |
| **3** | Protected against solid foreign objects of 2.5 mmø and larger |
| **4** | Protected against solid foreign objects of 1.0 mmø and larger |
| **5** | Dust protected |
| **6** | Dust-tight |

● **Second Digit:**
**Degree of protection against water**

| | | |
|---|---|---|
| **0** | Not protected | — |
| **1** | Protected against vertically falling water droplets | Dripproof type 1 |
| **2** | Protected against vertically falling water droplets when enclosure is tilted up to 15° | Dripproof type 2 |
| **3** | Protected against rainfall when enclosure is tilted up to 60° | Rainproof type |
| **4** | Protected against splashing water | Splashproof type |
| **5** | Protected against water jets | Water-jet-proof type |
| **6** | Protected against powerful water jets | Powerful water-jet-proof type |
| **7** | Protected against the effects of temporary immersion in water | Immersible type |
| **8** | Protected against the effects of continuous immersion in water | Submersible type |

## Others

**1. Material**

NBR: Nitrile rubber

FKM: Fluororubber

EPDM: Ethylene propylene rubber

**2. Symbol**

In the symbol (  ), when the valve is closed, flow is blocked from port 1 to port 2. However, if the pressure in port 2 is higher than port 1, the valve will not be able to block the fluid and it will flow from port 2 to port 1.

# *JSXF/JSXFA Series*
# Specific Product Precautions 1

**Be sure to read this before handling the products. Refer to the back cover for safety instructions. For 2-port solenoid valve for fluid control precautions, refer to the "Handling Precautions for SMC Products" and the "Operation Manual" on the SMC website: https://www.smcworld.com**

## Design

### ⚠ Warning

**1. Confirm the specifications.**
Give careful consideration to the operating conditions, such as the application, fluid, and environment, and use within the specified operating ranges. If the product is used beyond the specification range, this may cause the product to break or malfunction. We do not guarantee against any damage if the product is used outside of the specification range.

**2. Cannot be used as an emergency shutoff valve, etc.**
This product is not designed for use as an emergency shutoff valve or for use in other safety applications. If the valves are used in this type of system, other reliable safety assurance measures should also be adopted.

**3. Cannot be used for pressure (including vacuum) holding**
This product is not suitable for holding the pressure (including vacuum) inside of a pressure vessel because air leakage is unavoidable.

**4. Extended periods of continuous energization**
1) This is a valve for pulse operation. Do not energize it continuously. Since it consumes a large amount of air, the valve will oscillate (chatter) due to insufficient air supply on the inlet side, and this can lead to failure.
2) As the coil becomes hot when energized, set the energizing time to 1 s or less and the de-energizing time to at least twice the energizing time.
Furthermore, do not touch the coil while it is being energized or right after it has been energized.

**5. Reverse pressure**
If there is a possibility that reverse pressure will be applied, take countermeasures by installing a check valve, etc., on the downstream side.

**6. Do not disassemble the product and replacement parts, and do not make any modifications, including additional machining.**
Doing so may result in human injury and/or an accident.

## Operating Environment

### ⚠ Warning

**Do not use the product in such locations as those described below.**

**1. Locations with atmospheres where water vapor is present or locations where corrosive fluids (chemicals), sea water, or water may come into contact with the product**
Implement appropriate protective measures if the product will be in contact with water for long periods of time, even for products which have IP65 or IP67 enclosures. Such water may enter through microscopic gaps in the product's external surfaces, resulting in fire damage or short-circuiting of the solenoid valve coils. If installing the product in close proximity to equipment such as machine tools, processing machines, etc., which use large amounts of liquids or oils, be sure to confirm that liquid dispersal or spatter from the peripheral equipment does not come into contact with the product.

**2. Locations with explosive atmospheres**
The standard model cannot be used in explosive atmospheres. For use in explosive atmospheres, select the 55-JSXFA. (Refer to page 29.)

## Operating Environment

### ⚠ Warning

**3. Locations subject to vibration or impact**

**4. Locations where radiated heat will be received from nearby heat sources**

**5. Locations where freezing may occur within piping lines**
1) The product can be used in ambient and fluid temperatures as low as –40°C. However, take measures to prevent the freezing or solidification of impurities, etc.
2) If the dew point temperature is high and the ambient temperature is low, or a large flow is being used, this may cause freezing. Be sure to periodically drain the product, or conduct drain removal using an air dryer, and retain the heat of the body.

## Fluid

### ⚠ Warning

**1. Take measures to prevent static electricity since some fluids generate static electricity.**

**2. Fluid temperature**
Operate within the specified operating fluid temperature range.

**3. Install a filter to ensure clean fluids.**
1) The use of a fluid that contains foreign matter may result in the accelerated wear of the valve seat and armature as well as a malfunction or seal failure caused by the foreign matter adhering to the sliding parts of the armature. Install a filter of 5 μm or less on the upstream side of the valve to remove foreign matter.
2) Replace or clean the filter when the pressure drop reaches 0.1 MPa to prevent it from getting clogged.

## Fluid Quality

### ⚠ Warning

**1. Air**
1) Do not use compressed air that contains chemicals, synthetic oils that include organic solvents, salt, corrosive gases, etc., as it can cause a malfunction or damage.
2) Compressed air that contains excessive drainage may cause the malfunction of valves and other pneumatic equipment. Install an aftercooler or an air dryer on the inlet side of the valve to prevent drainage.
3) If excessive carbon powder is generated by the compressor, it may adhere to the inside of the valves and cause a malfunction. Install a mist separator on the inlet side of the valve to remove any carbon powder.
4) For compressed air quality, refer to the Best Pneumatics No. 6 catalog.
5) When air with a dew point of –70°C or lower is used, it may cause the accelerated wear of the inside of the valve, shortening the life of the product.

# *JSXF/JSXFA Series*
# Specific Product Precautions 2

**Be sure to read this before handling the products. Refer to the back cover for safety instructions. For 2-port solenoid valve for fluid control precautions, refer to the "Handling Precautions for SMC Products" and the "Operation Manual" on the SMC website: https://www.smcworld.com**

## Mounting

### ⚠Warning

1. **Ensure sufficient space for maintenance and inspection.**
   **In addition, when using a silencer, ensure sufficient space to replace the silencer.**
2. **When mounting the product, avoid sources of vibration, or change the mounting method to avoid resonance.**
3. **Do not install the product near a heat source. Be sure to install it in a location where the product will not be affected by radiant heat.**
4. **If air leakage increases or equipment does not operate properly, stop operation.**
   After installation or maintenance, check that the product is correctly mounted with appropriate functional and leakage inspections by supplying compressed air and power. Do not use the product if the equipment fails to operate correctly.
5. **Do not touch the valve while it is being energized or right after it has been energized.**
   Valves will reach high temperatures after operation. Use caution as burns may be incurred if a hot valve is touched directly.
6. **Do not apply external force to the coil section.**
   When the product is installed, apply a wrench to the outside of the piping connection while making sure that it does not come into contact with the coil.
7. **Do not warm the coil section with a heat insulator, etc.**
   When insulation is used to prevent freezing, the insulation should be limited to the piping and body only. Do not insulate the coil. This can cause the coil to burn out.

### ⚠Caution

1. **Installation of regulators and restrictors**
   If a regulator or restrictor is installed immediately before the inlet side of the valve or immediately after the outlet side of the valve, the valve will oscillate (chatter), resulting in a malfunction. Install it away from the valve or change the restriction amount.
2. **Install a header tank of sufficient capacity on the inlet side of the valve.**
   This product is a large flow valve, so if the tank capacity is small, valve opening failure or valve oscillation (chattering) may occur due to pressure drop or insufficient air supply, resulting in a malfunction.
3. **Painting and coating**
   Warnings or specifications printed or labeled on the product should not be erased, removed, or covered up.

## Piping

### ⚠Warning

1. **There may be cases in which the tubing detaches from the fitting and thrashes around uncontrollably due to tubing degradation or fitting breakage. To prevent this, fit the tubing with a protective cover or secure it in place.**

### ⚠Caution

1. **For handling One-touch fittings, refer to the "Fittings and Tubing Precautions" in the Handling Precautions for SMC Products.**
2. **Preparation before piping**
   Before piping is connected, it should be thoroughly blown out with air (flushing) or washed to remove chips, cutting oil, and other debris from inside the pipe. Install piping so that it does not apply pulling, pressing, bending, or other forces on the valve body.
3. **Winding of sealant tape**
   When connecting pipes, fittings, etc., do not allow any chips from the pipe threads and sealing material to enter the valve. Furthermore, when sealant tape is used, leave 1.5 to 2 thread ridges exposed at the end of the threads.

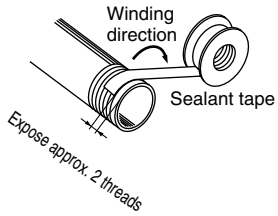


4. **When using a fitting other than an SMC fitting**
   Follow the instructions given by the fitting manufacturer.
5. **Avoid connecting ground lines to piping as this may cause the electric corrosion of the system.**
6. **When connecting piping to a product, avoid mistakes regarding the supply port, etc.**

# *JSXF/JSXFA Series*
# Specific Product Precautions 3

**Be sure to read this before handling the products. Refer to the back cover for safety instructions. For 2-port solenoid valve for fluid control precautions, refer to the "Handling Precautions for SMC Products" and the "Operation Manual" on the SMC website: https://www.smcworld.com**

## Piping

### Direct Piping Type Piping Precautions

## ⚠Caution

**1. Use steel tubes for the inlet and outlet piping of the valve.**

**2. Screw tightening torque for piping**

When attaching fittings to valves, tighten within the tightening torque range shown below.

**Tightening Torque for Piping**

| Connection thread | Proper tightening torque [N·m] |
|---|---|
| 1/4 | 12 to 14 |
| 3/8 | 22 to 24 |
| 1/2 | 28 to 30 |
| 3/4 | 28 to 30 |
| 1 | 36 to 38 |
| 1 1/2 | 40 to 42 |

### Compression Fitting Type Piping Precautions

## ⚠Warning

**Do not use the compression fitting to support the valve piping. The piping could disconnect from the valve. Be sure to mount the valve to secured piping. (Compression fittings do not have a valve-holding function.)**

## ⚠Caution

**1. Use steel tubes for the inlet and outlet piping of the valve.**

**2. Tightening of the compression nut**

Be sure to tighten the compression nut sufficiently to prevent the nut from loosening and leakage from occurring.

**Wrench Tightening Angle after Hand-tightening (Guide for tightening the nut)**

| Size | Wrench tightening angle |
|---|---|
| 3/4 (20A) | 90° to 270° |
| 1 (25A) | 135° to 315° |
| 1 1/2 (40A) | 150° to 330° |

- **Mount the valve to secured piping.**
- **Insert the piping until it stops to prevent the piping from going in at an angle.**
- **Do not expose the piping to oil or moisture. Otherwise, the valve may come off easily.**
- **Sealing performance will decrease due to the deterioration of the seals. Tighten the compression nut regularly.**

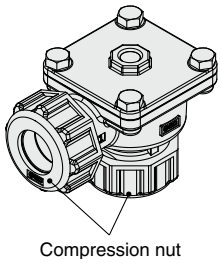


**Cross section of the nut**

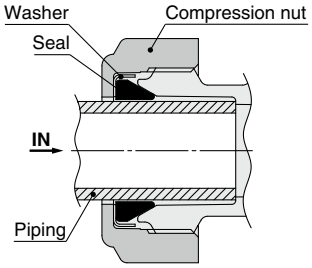


### Immersion Type Piping Precautions

## ⚠Caution

**Installation of the immersion type**

Refer to the figures below when installing the valve on a tank provided by the customer.

Tighten and check the pipe assembly sufficiently to prevent leakage, looseness, and play.

Step 1) Insert the pipe assembly into the OUT port of the valve assembly and screw it in vertically. (Inserting the pipe at an angle may damage the O-ring inside the valve.)

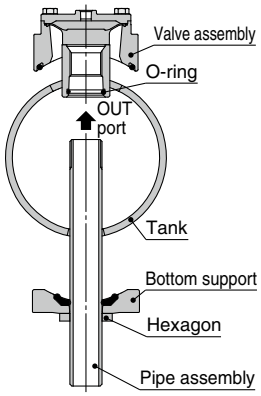


Step 2) Continue tightening the pipe assembly until the body and the bottom support touch the tank.

1. Tighten with a wrench or other tool so that the bottom support does not rotate. Refer to a). (It can also be secured like in b).) When securing, align the tank with the curved surface of the bottom support.
2. Tighten the hexagonal part of the pipe assembly with a wrench.

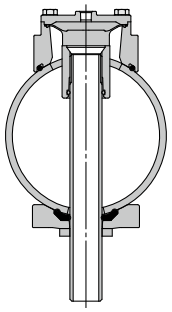

a)

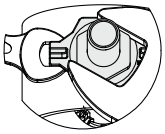

b)

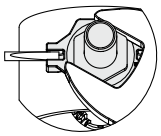

**Pipe Assembly Tightening Guide (Tightening torque)**

| Size | Tightening torque [N·m] |
|---|---|
| 3/4 (20A) | 30 |
| 1 (25A) | 50 |
| 1 1/2 (40A) | 50 |
| 2 (50A) | 120 |

- Excessive tightening may damage the valve or deform or damage the tank.
- The pipe assembly may become loose due to vibration when discharging air. Be sure to perform periodic retightening.
- The recommended tank is the ANSI Sch40. If making your own tank, ensure that it has sufficient strength to prevent it from becoming deformed when the valve is being screwed in.

# *JSXF/JSXFA Series*
# Specific Product Precautions 4

**Be sure to read this before handling the products. Refer to the back cover for safety instructions. For 2-port solenoid valve for fluid control precautions, refer to the "Handling Precautions for SMC Products" and the "Operation Manual" on the SMC website: https://www.smcworld.com**

## Wiring

### ⚠ Warning

**The solenoid valve is an electrical product. For safety, install an appropriate fuse and circuit breaker before use.**
When using multiple solenoid valves, it is not sufficient to merely install one fuse. For protecting the equipment more safely, select an appropriate fuse to each circuit of the solenoid valve.

### ⚠ Caution

1. **As a rule, use electrical wire with a cross sectional area of 0.5 to 1.25 mm$^2$ for wiring.**
2. **External force applied to the lead wire**
   If an excessive force is applied to the lead wire, this may cause faulty wiring. Take appropriate measures so that a force of 10 N or more is not applied to the lead wire. Do not bend the lead wires beyond 90° with a radius of less than 20 mm or damage may occur.

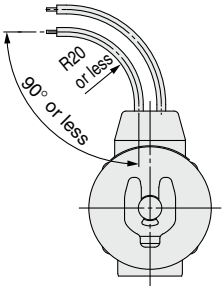


3. **Use electrical circuits which do not generate chattering in their contacts.**
4. **Use voltage which is within ±10% of the rated voltage. In cases with a DC power supply where importance is placed on responsiveness, stay within ±5% of the rated value. The voltage drop is the value in the lead wire section connecting the coil.**
5. **When a surge from the solenoid affects the electrical circuitry, install a surge voltage suppressor, etc., in parallel with the solenoid. Or, use the product with a surge voltage suppressor.**
   **Residual voltage of the surge voltage suppressor**
   DC specification: Approx. 60 V
   AC specification: Approx. 1 V
6. **Leakage voltage**
   When the solenoid valve is operated using the controller, etc., the leakage voltage should be the product allowable leakage voltage or less. Particularly when using a resistor in parallel with a switching element and using a C-R element to protect the switching element, take note that leakage current will flow through the resistor, C-R element, etc., creating a possible danger that the valve may not turn off.

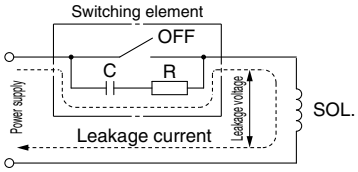


AC coil: 5% or less of rated voltage
DC coil: 2% or less of rated voltage

## Electrical Connections

### ⚠ Caution

**1. Grommet**
Lead wire: AWG20 Insulator O.D.: 2.6 mm

| Rated voltage | Lead wire color | |
|---|---|---|
| | ① | ② |
| DC | Black | Red |
| 100 VAC | Blue | Blue |
| 200 VAC | Red | Red |
| Other AC | Gray | Gray |

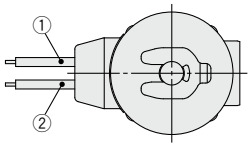


∗ There is no polarity.

**2. Conduit**
Lead wire: AWG18 Insulator O.D.: 2.8 mm

| Rated voltage | Lead wire color | | |
|---|---|---|---|
| | ① | ② | ③ |
| DC | Black | Red | Green/Yellow |
| 100 VAC | Blue | Blue | Green/Yellow |
| 200 VAC | Red | Red | Green/Yellow |
| Other AC | Gray | Gray | Green/Yellow |

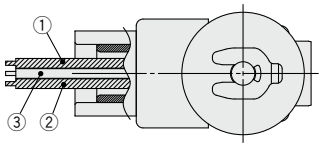


∗ There is no polarity.
∗ ③: Ground wire

# Specific Product Precautions 5

**Be sure to read this before handling the products. Refer to the back cover for safety instructions. For 2-port solenoid valve for fluid control precautions, refer to the "Handling Precautions for SMC Products" and the "Operation Manual" on the SMC website: https://www.smcworld.com**

## Electrical Connections

## ⚠ Caution

### 3. DIN terminal

**Disassembly**

1. After loosening the binding head screw with flange, then if the housing is pulled in the direction of the arrow, the connector will be removed from the solenoid valve.
2. Pull out the binding head screw with flange from the housing.
3. There is a cutout on the bottom of the terminal block. Insert a small flat head screwdriver, etc., into this cutout, and remove the terminal block from the housing. (Refer to the figure below.)
4. Remove the gland nut, and pull out the washer and the rubber seal.

**Wiring**

1. Pass the cable through the gland nut, washer, and rubber seal in this order, and insert these parts into the housing.
2. Loosen the binding head screw of the terminal block, then insert the core wire or the crimped terminal of the lead wire into the terminal, and securely fix it with the binding head screw. The binding head screw of the terminal block is M3.
   - ∗1 Tighten the screw to a torque of between 0.5 and 0.6 N·m.
   - ∗2 Cable O.D.: ø6 to ø12 mm
   - ∗3 For an outside cable diameter of ø9 to ø12 mm, remove the internal parts of the rubber seal before use.

**Assembly**

1. Pass the cable through the gland nut, washer, rubber seal, and the housing in this order, and connect to the terminal block. Then, set the terminal block inside the housing. (Push in the terminal block until it snaps into position.)
2. Insert the rubber seal and the washer in this order into the cable entry of the housing, and then tighten the gland nut securely.
3. Insert the gasket between the bottom part of the terminal block and the plug attached to the equipment, and then insert the binding head screw with flange from the top of the housing, and tighten it.
   - ∗1 Tighten the screw to a torque of between 0.5 and 0.6 N·m.
   - ∗2 The orientation of the connector can be changed in steps of 90° by changing the method of assembling the housing and the terminal block.

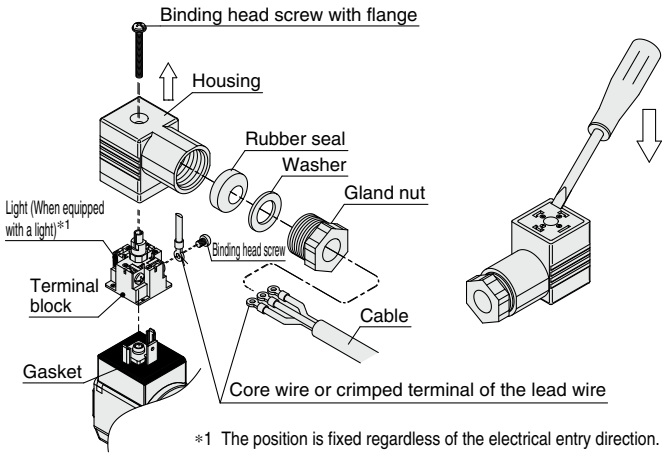


∗1 The position is fixed regardless of the electrical entry direction.

Internal connections are as shown below. Make connections to the power supply accordingly.

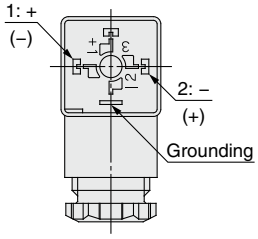


| Terminal no. | 1 | 2 |
|---|---|---|
| DIN terminal | + (–) | – (+) |

∗ There is no polarity.

## DIN (EN 175301-803) Terminal

This DIN terminal corresponds to the Form A DIN connector with an 18 mm terminal pitch.

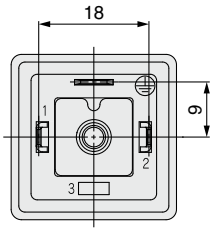


Applicable cable O.D.: ø6 to ø12

### 4. M12 connector

1. The IP67 (enclosure) rating of the valve can be obtained by using a cable with a female connector of IP67 specification. Please note that this product cannot be used in water.
2. Do not use a tool to mount the connector as this may cause damage. Only tighten it by hand. (0.39 to 0.49 N·m)
3. Avoid repeatedly bending or stretching the cable and applying heavy objects or force to it.
4. Do not pull the connector or cable unnecessarily.
5. Do not bend the cable at the root of the connector when installed.

**■ Coding and pin arrangement of the M12 connector on the valve side**

The shape (coding) and pin arrangement of the M12 connector are as follows.

**DC specification: A-coded, 4-pin**

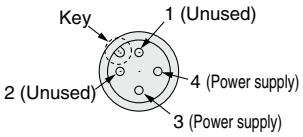


**AC specification: B-coded, 4-pin**

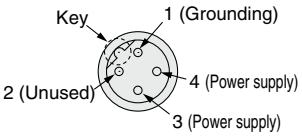


∗ The solenoid valve has no polarity for DC voltages.

When using the cable with a female connector, make sure that the coding is correct. When installing the cable, be sure to align the key on the cable side connector (female side) with the key on the valve side connector (male side).

Be careful not to squeeze it in the wrong direction as pin damage, etc., may result.

# *JSXF/JSXFA Series*
# Specific Product Precautions 6

**Be sure to read this before handling the products. Refer to the back cover for safety instructions. For 2-port solenoid valve for fluid control precautions, refer to the "Handling Precautions for SMC Products" and the "Operation Manual" on the SMC website: https://www.smcworld.com**

## Electrical Circuits

### ⚠ Caution

**1. DC circuit**

**● Grommet**

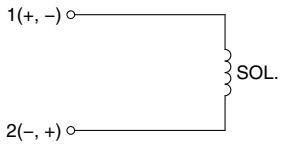


Without electrical option

**● Grommet, Conduit, DIN terminal**

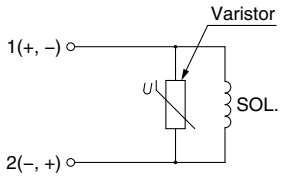


With surge voltage suppressor

**● DIN terminal**

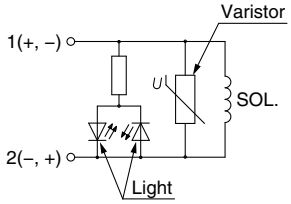


With light/surge voltage suppressor

**● M12 connector**

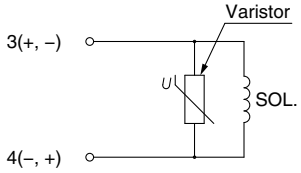


With surge voltage suppressor

**2. AC circuit**

The standard product is equipped with a surge voltage suppressor.

**● Grommet, Conduit, DIN terminal, M12 connector**

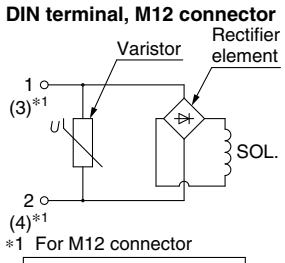


*1 For M12 connector

Without electrical option

**● DIN terminal**

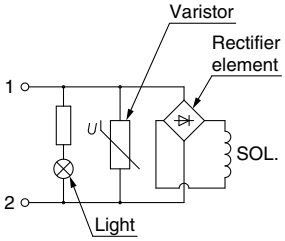


With light

## Replacing the Solenoid Coils

### ⚠ Warning

1. **Before replacing the solenoid coil, turn OFF the power supply.**
2. **Due to the fluid temperature and the operating conditions, the solenoid coil may become extremely hot. Be careful when handling.**

### ⚠ Caution

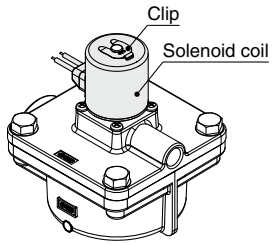


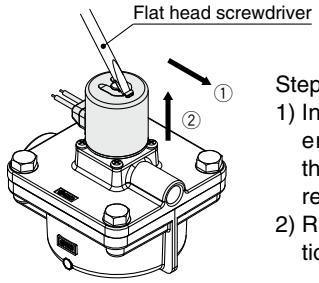


Step 1) Remove the coil.
1) Insert a flat head screwdriver, etc., into the groove in the clip and slide it in the direction of ① to remove it.
2) Remove the coil in the direction of ②.

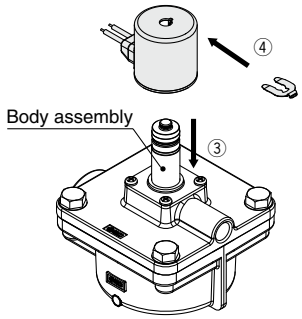


Step 2) Assemble the coil.
1) Insert the replacement coil into the body assembly in the direction of ③.
2) Insert the clip in the direction of ④ by aligning it with the groove in the top of the body assembly. The clip is directional. Refer to the figures below.

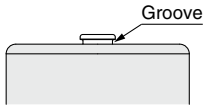


Be sure to confirm the clip direction (back and front) as well as the inserted condition.

**OK** **Not OK**

Clip direction

**OK** **Not OK**

Inserted condition

∗ When inserting the coil, be sure to push it in until the groove in the body assembly is visible.

# *JSXF/JSXFA Series*
# Specific Product Precautions 7

**Be sure to read this before handling the products. Refer to the back cover for safety instructions. For 2-port solenoid valve for fluid control precautions, refer to the "Handling Precautions for SMC Products" and the "Operation Manual" on the SMC website: https://www.smcworld.com**

### Appearance

## ⚠Caution

1. **Surface treatment is applied to the product to improve corrosion resistance. There may be a spotted pattern on the surface depending on the treatment condition, but this does not affect usage or performance.**
2. **Rust may be generated on the solenoid coil depending on the operating environment and conditions, but this does not affect usage or performance.**

### Maintenance

## ⚠Warning

1. **Removal of product**
   1) Turn OFF the fluid supply, and release the fluid pressure in the system.
   2) Turn OFF the power supply.
   3) Confirm that the valve temperature has dropped sufficiently before removing the product.
2. **Replace or clean filters periodically.**
   Replace filters after 1 year of use or earlier if the pressure drop reaches 0.1 MPa.
3. **Exhaust the drainage from air filters periodically.**
   If condensation in the drain bowl is not emptied on a regular basis, the bowl will overflow and allow the condensation to enter the compressed air lines. This may result in the malfunction of pneumatic equipment. If the drain bowl is difficult to check or remove, the installation of a drain bowl with an auto drain option is recommended.
4. **Silencer**
   Prolonged use may cause clogging and changes in response characteristics. Replace it after using about 500,000 times. This number is subject to change based on fluid quality and energizing time.
5. **Disassembly**
   Do not disassemble anything other than the main valve and solenoid coil. Doing so may result in a malfunction.
   Refer to the "Disassembly/Assembly Procedure" on pages 13 and 25 for part replacement instructions.
6. **Low-frequency operation**
   Switch valves at least once every 30 days to prevent a malfunction. Also, in order to use them under the optimum state, conduct an inspection biannually.
7. **Storage**
   In the case of long-term storage after use, thoroughly remove all moisture and store it in a location where the product is not exposed to sunlight and higher humidity to prevent rust and the deterioration of rubber materials, etc.
8. **Perform maintenance and inspection periodically.**
   Confirm that the product is mounted correctly by conducting suitable function and leakage tests periodically. If air leakage increases or equipment does not operate properly, stop operation.

### Dedicated Controller for Operation VXFC Series

### Wiring

## ⚠Warning

1. The controller starts its output the moment the power switch is turned ON. Be aware that even if the power switch is turned OFF, power is connected to the terminal block.

## ⚠Caution

1. Make sure that the power supply voltage to be input matches the voltage in the controller's specifications. The power supply voltage that has been input becomes the voltage that is output to the solenoid valves.
2. Connect a ground that is rated Class 3 or greater to the power supply terminal block's FG.
3. If the power source is DC, be sure to confirm the polarity. If the polarity is incorrect, it may result in a malfunction or damage.
4. For details, please refer to the separate "Operation Manual."
5. The solenoid valve mounted on the controller should be equipped with a surge voltage suppressor.

### Operating Environment

## ⚠Warning

1. Operate under conditions that are free of vibration and impact.
2. Operate in an ambient temperature range between 0°C and 50°C.
3. Operate in an ambient humidity range between 45% to 80% (no condensation).

### Return of Product

## ⚠Warning

**If the product to be returned is contaminated or is possibly contaminated with substances that are harmful to humans, for safety reasons, please contact SMC beforehand and then employ a specialist cleaning company to decontaminate the product. After the decontamination prescribed above has been carried out, submit a Product Return Request Sheet or the Detoxification/Decontamination Certificate to SMC and await SMC's approval and further instructions before attempting to return the item.**
**Please refer to the International Chemical Safety Cards (ICSC) for a list of harmful substances.**
**If you have any further questions, please don't hesitate to contact your SMC sales representative.**

## ⚠ Safety Instructions

These safety instructions are intended to prevent hazardous situations and/or equipment damage. These instructions indicate the level of potential hazard with the labels of **"Caution," "Warning"** or **"Danger."** They are all important notes for safety and must be followed in addition to International Standards (ISO/IEC)*1), and other safety regulations.

**⚠ Caution:** **Caution** indicates a hazard with a low level of risk which, if not avoided, could result in minor or moderate injury.

**⚠ Warning:** **Warning** indicates a hazard with a medium level of risk which, if not avoided, could result in death or serious injury.

**⚠ Danger :** **Danger** indicates a hazard with a high level of risk which, if not avoided, will result in death or serious injury.

*1) ISO 4414: Pneumatic fluid power – General rules relating to systems.
ISO 4413: Hydraulic fluid power – General rules relating to systems.
IEC 60204-1: Safety of machinery – Electrical equipment of machines. (Part 1: General requirements)
ISO 10218-1: Manipulating industrial robots – Safety.
etc.

### ⚠ Warning

**1. The compatibility of the product is the responsibility of the person who designs the equipment or decides its specifications.**
Since the product specified here is used under various operating conditions, its compatibility with specific equipment must be decided by the person who designs the equipment or decides its specifications based on necessary analysis and test results. The expected performance and safety assurance of the equipment will be the responsibility of the person who has determined its compatibility with the product. This person should also continuously review all specifications of the product referring to its latest catalog information, with a view to giving due consideration to any possibility of equipment failure when configuring the equipment.

**2. Only personnel with appropriate training should operate machinery and equipment.**
The product specified here may become unsafe if handled incorrectly. The assembly, operation and maintenance of machines or equipment including our products must be performed by an operator who is appropriately trained and experienced.

**3. Do not service or attempt to remove product and machinery/equipment until safety is confirmed.**
1. The inspection and maintenance of machinery/equipment should only be performed after measures to prevent falling or runaway of the driven objects have been confirmed.
2. When the product is to be removed, confirm that the safety measures as mentioned above are implemented and the power from any appropriate source is cut, and read and understand the specific product precautions of all relevant products carefully.
3. Before machinery/equipment is restarted, take measures to prevent unexpected operation and malfunction.

**4. Contact SMC beforehand and take special consideration of safety measures if the product is to be used in any of the following conditions.**
1. Conditions and environments outside of the given specifications, or use outdoors or in a place exposed to direct sunlight.
2. Installation on equipment in conjunction with atomic energy, railways, air navigation, space, shipping, vehicles, military, medical treatment, combustion and recreation, or equipment in contact with food and beverages, emergency stop circuits, clutch and brake circuits in press applications, safety equipment or other applications unsuitable for the standard specifications described in the product catalog.
3. An application which could have negative effects on people, property, or animals requiring special safety analysis.
4. Use in an interlock circuit, which requires the provision of double interlock for possible failure by using a mechanical protective function, and periodical checks to confirm proper operation.

### ⚠ Caution

**1. The product is provided for use in manufacturing industries.**
The product herein described is basically provided for peaceful use in manufacturing industries.
If considering using the product in other industries, consult SMC beforehand and exchange specifications or a contract if necessary.
If anything is unclear, contact your nearest sales branch.

## Limited warranty and Disclaimer/ Compliance Requirements

The product used is subject to the following "Limited warranty and Disclaimer" and "Compliance Requirements".
Read and accept them before using the product.

### Limited warranty and Disclaimer

1. The warranty period of the product is 1 year in service or 1.5 years after the product is delivered, whichever is first.*2)
   Also, the product may have specified durability, running distance or replacement parts. Please consult your nearest sales branch.
2. For any failure or damage reported within the warranty period which is clearly our responsibility, a replacement product or necessary parts will be provided.
   This limited warranty applies only to our product independently, and not to any other damage incurred due to the failure of the product.
3. Prior to using SMC products, please read and understand the warranty terms and disclaimers noted in the specified catalog for the particular products.

***2) Vacuum pads are excluded from this 1 year warranty.**
A vacuum pad is a consumable part, so it is warranted for a year after it is delivered.
Also, even within the warranty period, the wear of a product due to the use of the vacuum pad or failure due to the deterioration of rubber material are not covered by the limited warranty.

### Compliance Requirements

1. The use of SMC products with production equipment for the manufacture of weapons of mass destruction (WMD) or any other weapon is strictly prohibited.
2. The exports of SMC products or technology from one country to another are governed by the relevant security laws and regulations of the countries involved in the transaction. Prior to the shipment of a SMC product to another country, assure that all local rules governing that export are known and followed.

### ⚠ Caution

**SMC products are not intended for use as instruments for legal metrology.**
Measurement instruments that SMC manufactures or sells have not been qualified by type approval tests relevant to the metrology (measurement) laws of each country. Therefore, SMC products cannot be used for business or certification ordained by the metrology (measurement) laws of each country.

**Revision History**

Edition B
* An immersion type has been added.
* The ATEX compliant 55-JSXFA series has been added.
* The number of pages has been increased from 16 to 20. YT

Edition C
* 3/4 (20A), 1 1/2 (40A), and 2 (50A) port sizes have been added to the immersion type.
* The number of pages has been increased from 20 to 24. ZY

Edition D
* A solenoid valve type has been added.
* UKCA compliance has been added.
* The number of pages has been increased from 24 to 44. AS

**⚠ Safety Instructions** Be sure to read the "Handling Precautions for SMC Products" (M-E03-3) and "Operation Manual" before use.

**SMC Corporation**
Akihabara UDX 15F,
4-14-1, Sotokanda, Chiyoda-ku, Tokyo 101-0021, JAPAN
Phone: 03-5207-8249 Fax: 03-5298-5362
https://www.smcworld.com